CITIPORT EURO 6 C
ELECTRICAL CIRCUIT DIAGRAMS

MARCH / 2018

BU BELGE ANADOLU ISUZU OTOMOTIV SANAYI VE TIC. AS. NIN YAZILI IZNI OLMADAN HICBIR SEKILDE KOPYALANAMAZ.THIS DOCUMENT CAN NOT BE REPRODUCED WITHOUT WRITTEN PERMISSION OF ANADOLU ISUZU OTOMOTIV SANAYI VE TIC. AS.

CITIPORT E6 C

COLOR CODE

CABLE CODE	COLOR CODE MEANING
B	BLACK
W	WHITE
R	RED
G	GREEN
Y	YELLOW
L	BLUE
O	ORANGE
BR	BROWN
V	VIOLET
LG	LIGHT GREEN
GY	GREY
P	PINK
SB	SKY BLUE
PU	PURPLE
DG	DARK GREEN

BU BELGE ANADOLU ISUZU OTOMOTIV SANAYI VE TIC. AS. NIN YAZILI IZNI OLMADAN HICBIR SEKILDE KOPYALANAMAZ.THIS DOCUMENT CAN NOT BE REPRODUCED WITHOUT WRITTEN PERMISSION OF ANADOLU ISUZU OTOMOTIV SANAYI VE TIC. AS.

SAYFA NO / SHEET NO: 2

CITIPORT E6 C
CIRCUIT DIAGRAM REPRESENTATION

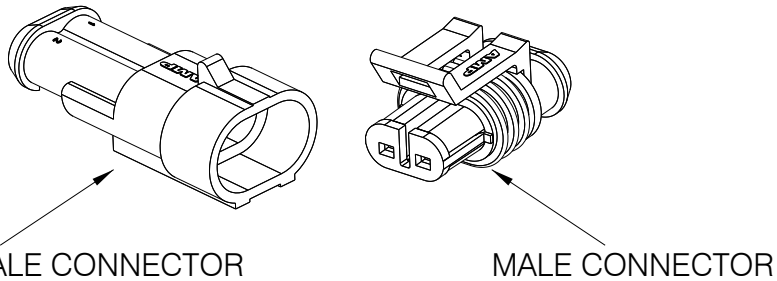

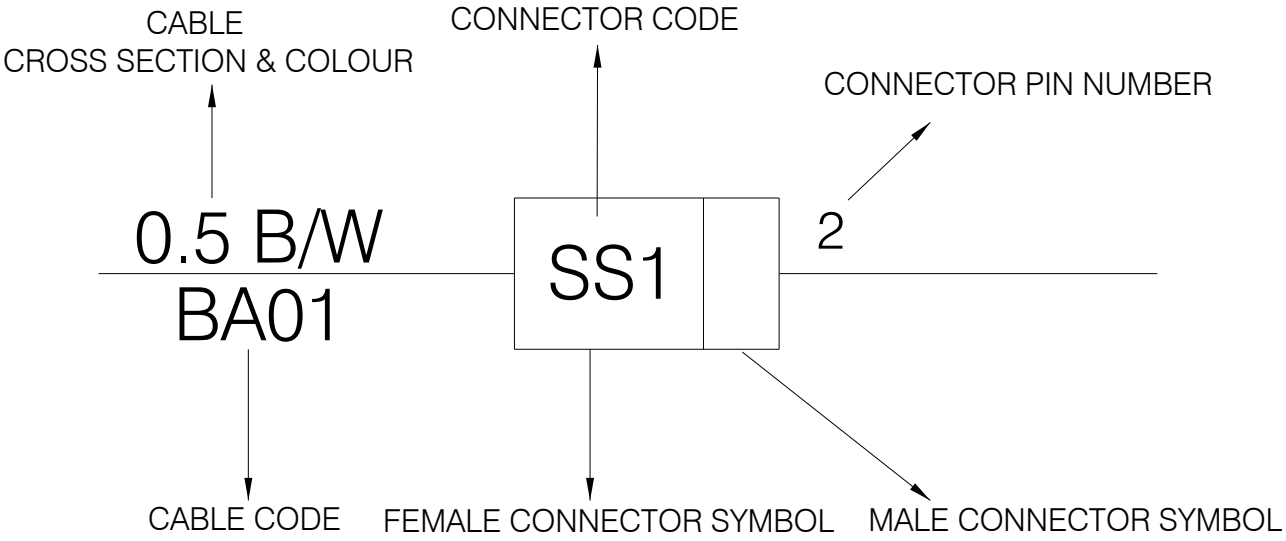

ANADOLU ISUZU
ANADOLU ISUZU OTOMOTIV SANAYI VE TICARET A.S.

BU BELGE ANADOLU ISUZU OTOMOTIV SANAYI VE TIC. AS. NIN YAZILI IZNI OLMADAN HICBIR SEKILDE KOPYALANAMAZ.THIS DOCUMENT CAN NOT BE REPRODUCED WITHOUT WRITTEN PERMISSION OF ANADOLU ISUZU OTOMOTIV SANAYI VE TIC. AS.

SAYFA NO / SHEET NO: X

CITIPORT E6
XXXX XXXXX

CIRCUIT DIAGRAM NAME

VEHICLE MODEL

BU BELGE ANADOLU ISUZU OTOMOTIV SANAYI VE TIC. AS. NIN YAZILI IZNI OLMADAN HICBIR SEKILDE KOPYALANAMAZ.THIS DOCUMENT CAN NOT BE REPRODUCED WITHOUT WRITTEN PERMISSION OF ANADOLU ISUZU OTOMOTIV SANAYI VE TIC. AS.

CITIPORT E6 C
CIRCUIT DIAGRAM SYMBOLS

SYMBOL	EXPLANATION	SYMBOL	EXPLANATION
	FUSE		CABLE SPLICE POINT
	DELAYED FUSE	+ −	BATTERY
	SWITCH (Normal Open)		DIODE
	SWITCH		ELECTRONIC PART
	SWITCH (Normal Close)		RESISTANCE
	CIRCUIT BRAKER		SPEAKER
	LAMP		SOUND WARNING
	DOUBLE FILAMENT LAMP		CONNECTOR
M	MOTOR		LED
	RHEOSTAT		CAPACITOR
	INDUCTOR,SELENOID, MAGNETİC VALVE		HORN
M	STARTER MOTOR		SELENOID
30 86 87a 87 85	RELAY	88 88a 85 86	MAIN RELAY

ANADOLU ISUZU
ANADOLU ISUZU OTOMOTIV SANAYI VE TICARET A.S.

BU BELGE ANADOLU ISUZU OTOMOTIV SANAYI VE TIC. AS. NIN YAZILI IZNI OLMADAN HICBIR SEKILDE KOPYALANAMAZ.THIS DOCUMENT CAN NOT BE REPRODUCED WITHOUT WRITTEN PERMISSION OF ANADOLU ISUZU OTOMOTIV SANAYI VE TIC. AS.

SAYFA NO / SHEET NO: 4

CITIPORT E6 C
CONNECTOR LAY-OUT

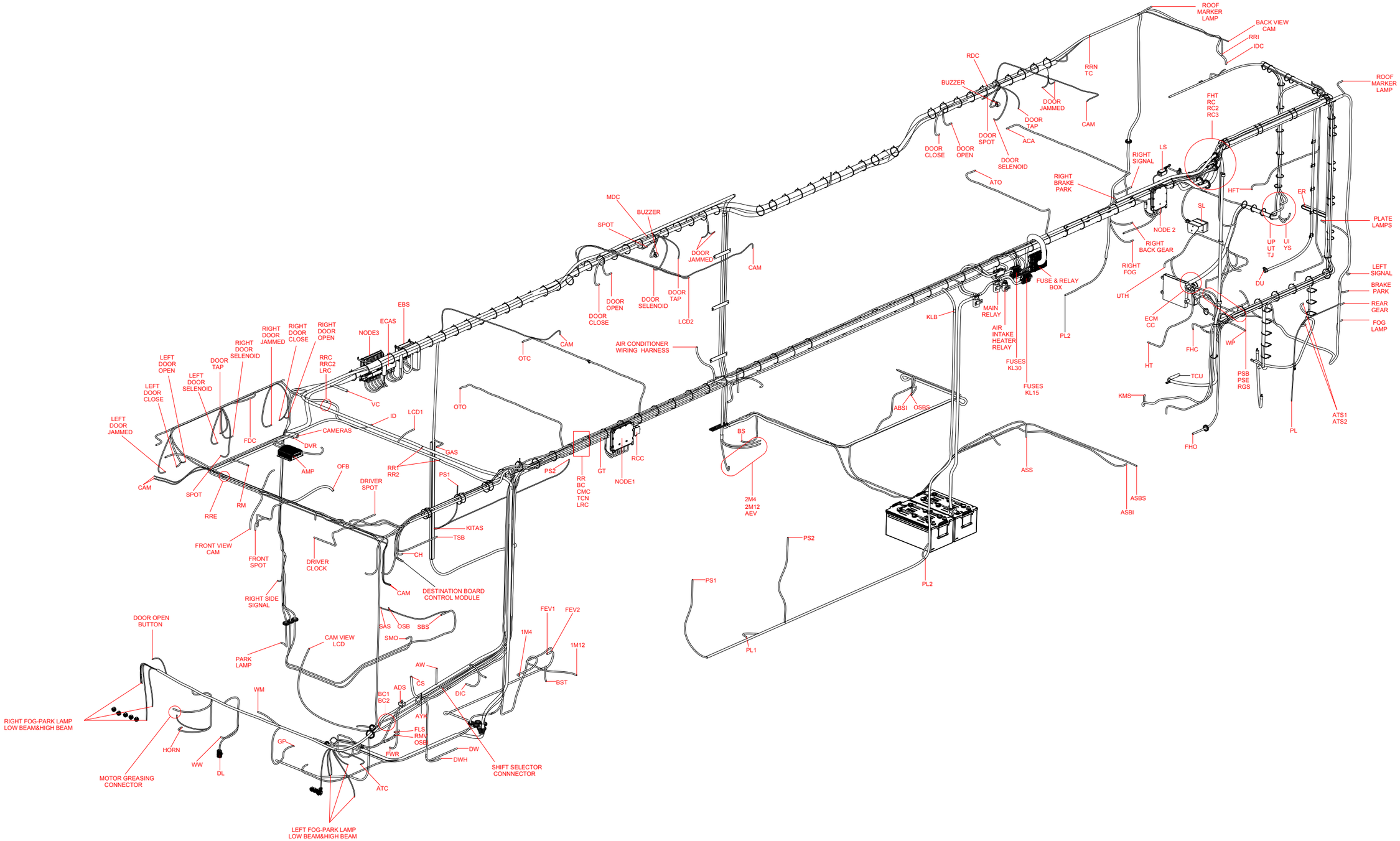

BU BELGE ANADOLU ISUZU OTOMOTIV SANAYI VE TIC. AS. NIN YAZILI IZNI OLMADAN HICBIR SEKILDE KOPYALANAMAZ.THIS DOCUMENT CAN NOT BE REPRODUCED WITHOUT WRITTEN PERMISSION OF ANADOLU ISUZU OTOMOTIV SANAYI VE TIC. AS.

2M12	AXLE MODULATOR 2M 12 PINS
2M4	AXLE MODULATOR 2M 4 PINS
ABSI	REAR LEFT LINING WARNING
AC	AMPHI CONTROL
ACA	REAR WINDOW OF REAR ROOF
ACC	AIR CONDITIONER CONNECTOR
ADH	AIR DRYER HEATER
ADS	EMERGENCY SWITCH
AEV	REAR ECAS VALVE
AFC	AIR FILTER WARNING CONNECTION
AKU	AMPHI CONTROL UNIT
AMP	AMPHI
ASBI	REAR RIGHT LINING WARNING
ASBS	REAR RIGHT PRESSURE SENSOR
ASS	REAR RIGHT SENSOR
ATC	AMBIENT AIR TEMP. CONNECTOR
ATO	FRONT WINDOW OF REAR ROOF
ATS1	ALTERNATOR CONNECTOR-1
ATS2	ALTERNATOR CONNECTOR-2
AW	AUTOMATIC WINDOW CONTROL
AYK	MIRROR CONTROL
BC	BODY CONNECTOR
BC1	BODY CONNECTOR-1
BC2	BODY CONNECTOR-2
BE	TICKET MATIC(READER) SUPPLY
BEG	TICKET MATIC SUPPLY INPUT
BM	PRESSURE SENSOR
BS	BRAKE SENSOR
BST	BRAKE SIGNAL TRANSMITTER
BX1	EBS CONNECTOR X1
CC	14 PIN CROSSOVER CONNECTION
CCC	REAR CONTROL CONNECTION CONN.
CEA	CAN ECM AREA CONNECTOR
CEC	CAN ECM CONNECTOR
CH	AIR CONDITIONER-HEATER CONTROL
CLC	COOLANT LEVEL CONNECTOR
CMC	CAN MUX CONNECTOR
CMI	CAN MUX CONNECTOR INPUT
CMI2	CAN MUX CONNECTOR INPUT-2
CMO	CAN MUX CONNECTOR OUTPUT
CMO2	CAN MUX CONNECTOR OUTPUT-2
CP	CAN POWER CONNECTOR
CP1	CAN POWER CONNECTOR-1

CP2	CAN POWER CONNECTOR-2
CPD	CAN POWER DISTRIBUTION
CS	LIGHTER
CTS	CAN ROOF CONNECTOR
CX1	ECAS CONNECTOR X1
DCR	DRIVER RIGHT CURTAIN
DF	DOOR AIR FINISHED SENSOR
DIC	DIAGNOSTIC CONNECTOR
DJ1	FRON DOOR IS JAMMED-1
DJ2	FRONT DOOR IS JAMMED-2
DL	DAYTIME RUNNING LIGHTS MODULAT.
DOP	DOOR OPENER BUTTON
DR	DISABLED RAMP
DRR	DRIVER REGION CONNECTOR
DS	DRIVER SPOT
DS2	DRIVER SPOT-2
DU	DOSING UNIT
DVR	DVR SUPPLY
DW	DRIVER WINDOW CONNECTOR
DWH	DRIVER WINDOW HEATER
EB	DISABLED BUTTON
EF	ECM FINISHER
EFI	HAND BRAKE WARNING SENSOR
EGS	EGP CONNECTOR
EPS	EGP FINISHER
ER	ENGINE ROOM LIGHT
ER1	ENGINE ROOM-1
ER2	ENGINE ROOM-2
ER3	ENGINE ROOM-3
ES	EXHAUST SYSYTEM CONTROL
EX2	ECAS ECU X2 CONNECTOR
EX3	ECAS ECU X3 CONNECTOR
FC1	FRONT CONNECTOR-1
FC2	FRONT CONNECTOR-2
FD1	FRONT DOOR CLOSE-1
FD2	FRONT DOOR CLOSE-2
FDC	FRONT DOOR CONNECTOR
FEV1	FRONT ECAS VALVE-1
FEV2	FRONT ECAS VALVE-2
FHC	FRONT HEATER CONNECTION
FHL	FRONT HEATER CONTROL
FHN	FRONT HEATER CONNECTION
FHO	FRONT HEATER CONNECTOR

BU BELGE ANADOLU ISUZU OTOMOTIV SANAYI VE TIC. AS. NIN YAZILI IZNI OLMADAN HICBIR SEKILDE KOPYALANAMAZ.THIS DOCUMENT CAN NOT BE REPRODUCED WITHOUT WRITTEN PERMISSION OF ANADOLU ISUZU OTOMOTIV SANAYI VE TIC. AS.

CITIPORT E6 C
CONNECTORS CODES-2

FHR	FRONT HEATER ROOF
FHT	FRONT HEATER TAIL CONNECTOR
FLS	FRONT LEFT SENSOR
FR	FRONT ROUTE INFO DISPLAY
FR2	FRONT ROUTE INFO DISPLAY-2
FRC	FRONT ROOF CONNECTION
FRO	FRONT ROOF COMMISSURE
FS1	FRONT DOOR SELENOID-1
FS2	FRONT DOOR SELENOID-2
FW	FIRE WARNING
FWR	FIXED WINDOW HEATER
GAS	GAS PEDAL (RIGHT ROOF HARNESS)
GCC	GEAR CAN CONNECTION
GL	GEAR LUGGAGE CONNECTOR
GP	GAS PEDAL (BODY HARNESS)
GT	GRESSING TIMER
HFT	HYDRAULIC FAN DRIVE
HR1	HORN-1
HR2	HORN-2
HT	HEATER
HV	HZ VALVE
ID	INFO DISPLAY
IDC	INFO DISPLAY CONNECTOR
KA1	FRONT DOOR OPEN-1
KA2	FRONT DOOR OPEN-2
KAY	FRONT DOOR LIGHTING
KLB	HEATER CONNECTION
KMS	KM SENSOR CONNECTOR
KX1	CONTROL MODUL X1
KX2	CONTROL MODUL X2
KX3	CONTROL MODUL X3
LC	LEFT ROOM COMMISSURE
LC2	LEFT ROOM COMMISSURE-2
LCD	LCD SUPPLY
LCD1	LCD-1 SUPPLY
LCD2	LCD-2 SUPPLY
LCDA	LCD ON/OFF CONTROL
LDC	LEFT DRIVER CURTAIN
LIS	LIGHTING CONNECTOR
LM	LEFT MIRROR
LRC	LEFT ROOF CONNECTOR
LRC1	LEFT ROOF CONNECTION-1
LRC2	LEFT ROOF CONNECTION-2

LRO	LEFT ROOF COMMISSURE
LS	LUGGAGE SWITCH
LSS	LEFT SIDE SIGNAL
MK	MK VALVE
MRC	MIDDLE DOOR CONNECTION
N101	NODE 1 CN101
N102	NODE1 CN102
N103	NODE1 CN103
N104	NODE1 CN104
N105	NODE1 CN105
N106	NODE1 CN106
N2C1	NODE2 CN1
N2C2	NODE2 CN2
N2C3	NODE2 CN3
N301	NODE3 CN101
N302	NODE3 CN102
N303	NODE3 CN103
N304	NODE3 CN104
N305	NODE3 CN105
N306	NODE3 CN106
OC	OIL COMPLETION
OEC	OEM ECM 96-PIN CONNECTOR
OFB	FRONT BRAKE PRESSURE SENSOR
OKS	FRONT HEATER CONNECTOR
OSB	FRONT RIGHT LINING WARNING
OSBI	FRONT LEFT LINING WARNING
OSBS	REAR LEFT PRESSURE SENSOR
OT	OUTSIDE TEMPERATURE SENSOR
OTC	REAR OF FRONT ROOF GLASS
OTO	FRONT OF FRONT ROOF GLASS
PC	PARK CONNECTOR
PCN1	PODIUM CN1
PCN2	PODIUM CN2
PCN3	PODIUM CN3
PCN4	PODIUM CN4
PCN6	PODIUM CN6
PCN7	PODIUM CN7
PL1	PARK LAMP-1
PL2	PARK LAMP-2
PL3	PARK LAMP-3
PS1	PRIORITY STOP-1
PS2	PRIORITY STOP-2
PSB	PARK SENSOR BUZZER

BU BELGE ANADOLU ISUZU OTOMOTIV SANAYI VE TIC. AS. NIN YAZILI IZNI OLMADAN HICBIR SEKILDE KOPYALANAMAZ.THIS DOCUMENT CAN NOT BE REPRODUCED WITHOUT WRITTEN PERMISSION OF ANADOLU ISUZU OTOMOTIV SANAYI VE TIC. AS.

PSE	PARK SENSOR SUPPLY
RA	RADIO A CONNECTOR
RB	RADIO B CONNECTOR
RBP	REAR BRAKE SENSOR PRESSURE
RC	ROOF CONNECTOR
RC2	ROOF CONNECTOR-2
RCC	REMOTE CONTROL CONNECTION
RDC	REAR DOOR CONNECTION
REC	RESISTANCE CONNECTOR
RGS	REVERSE GEAR ALERT SOUND
RIC	ROUTE INFO DISPLAY CONNECTION
RID	ROUTE INFO DISPLAY CONTROL
RM	RIGHT MIRROR
RMV	RIGHT ABS MODULATOR VALVE
RN	ROOF CONNECTOR
RR	RIGHT ROOF CONNECTOR
RR1	RIGHT ROOF CONNECTION-1
RR2	RIGHT ROOF CONNECTION-2
RRC	RIGHT ROOF CONNECTION
RRC2	RIGHT ROOF CONNECTION-2
RRE	RIGHT ROOF CONNECTION
RRI	REAR ROUTE INFO DISPLAY
RRN	RIGHT ROOF CONNECTION
RRO	RIGHT ROOF CONNECTION
S1	SENSOR-1
S2	SENSOR-2
SAS	FRONT RIGHT SENSOR
SBS	FRONT RIGHT PRESSURE SENSOR
SBL	STOP BUTTON LAMP
SID	STOP INFO DISPLAY
SL	STARTER
SLV	STEERING LOCK VALVE
SMI	STARTER MOTOR IMS CONNECTION
SMO	RIGHT ABS MODULATOR VALVE
SPK	SPEAKER
SS	SELENOID
ST1	PCB AIR CONDITIONER CONN. ST1
ST2	CONNECTION CONNECTOR ST2
ST21	FRONT PANEL CONNECTION ST21
ST4	PCB HEATER CONNECTOR ST4
ST5	FRONT PANEL CONNECTION ST5
TAC	TAP CONNECTOR
TC	TAIL CONNECTION
TCN	TAKO CAN

TE	TACHOGRAPH SUPPLY CONNECTOR
TES	TICKET ENERGY SUPPLY
TJ	TBAP JUMPER
TLC	TAIL CONNECTOR
TPC	TAKO POWER CAN
RC3	ROOF CONNECTOR-3
TSB	TACHOGRAPH CONNECTOR-B
TSE	TBAP SENSOR
TW	TREE WAY VALVE
UI	UREA LINE HEATER (INTAKE)
UM	UP MARKED LAMP
UP	UREA LINE HEATER (PRESSURE)
UR	UREA LINE HEATER (RETURN)
UTH	UREA TANK HEATER VALFE
UTT	UREA TANK TEMPERATURE LEVEL
UTV	UREA TANK VDC INPUT
VC	VENTILATION CONNECTION
VO	VALVE CONTROL
VSC	VALIDATOR SUPPLY CONNECTOR
WM	WIPER MOTOR CONNECTION
WP	WATER PUMP
WS	WATER PUMP SENSOR-1
WW	WIPER WATER PUMP CONNECTOR
X2	EBS ECU X2 CONNECTOR
X4	EBS ECU X4 CONNECTOR
X5	EBS ECU X5 CONNECTOR
YS	OIL LEVEL
YS1	FIRE SENSOR-1
YS2	FIRE SENSOR-2
YS3	FIRE SENSOR-3
YS4	FIRE SENSOR-4
RC3	ROOF CONNECTOR-3
LRC3	LEFT ROOF CONNECTION-1
TCU	TRANSMISSION CONTROL UNIT

BU BELGE ANADOLU ISUZU OTOMOTIV SANAYI VE TIC. AS. NIN YAZILI IZNI OLMADAN HICBIR SEKILDE KOPYALANAMAZ.THIS DOCUMENT CAN NOT BE REPRODUCED WITHOUT WRITTEN PERMISSION OF ANADOLU ISUZU OTOMOTIV SANAYI VE TIC. AS.

ANADOLU ISUZU
ANADOLU ISUZU OTOMOTIV SANAYI VE TICARET A.S.

SAYFA NO / SHEET NO: 8

CITIPORT E6 C
FUSE SYSTEM - 1

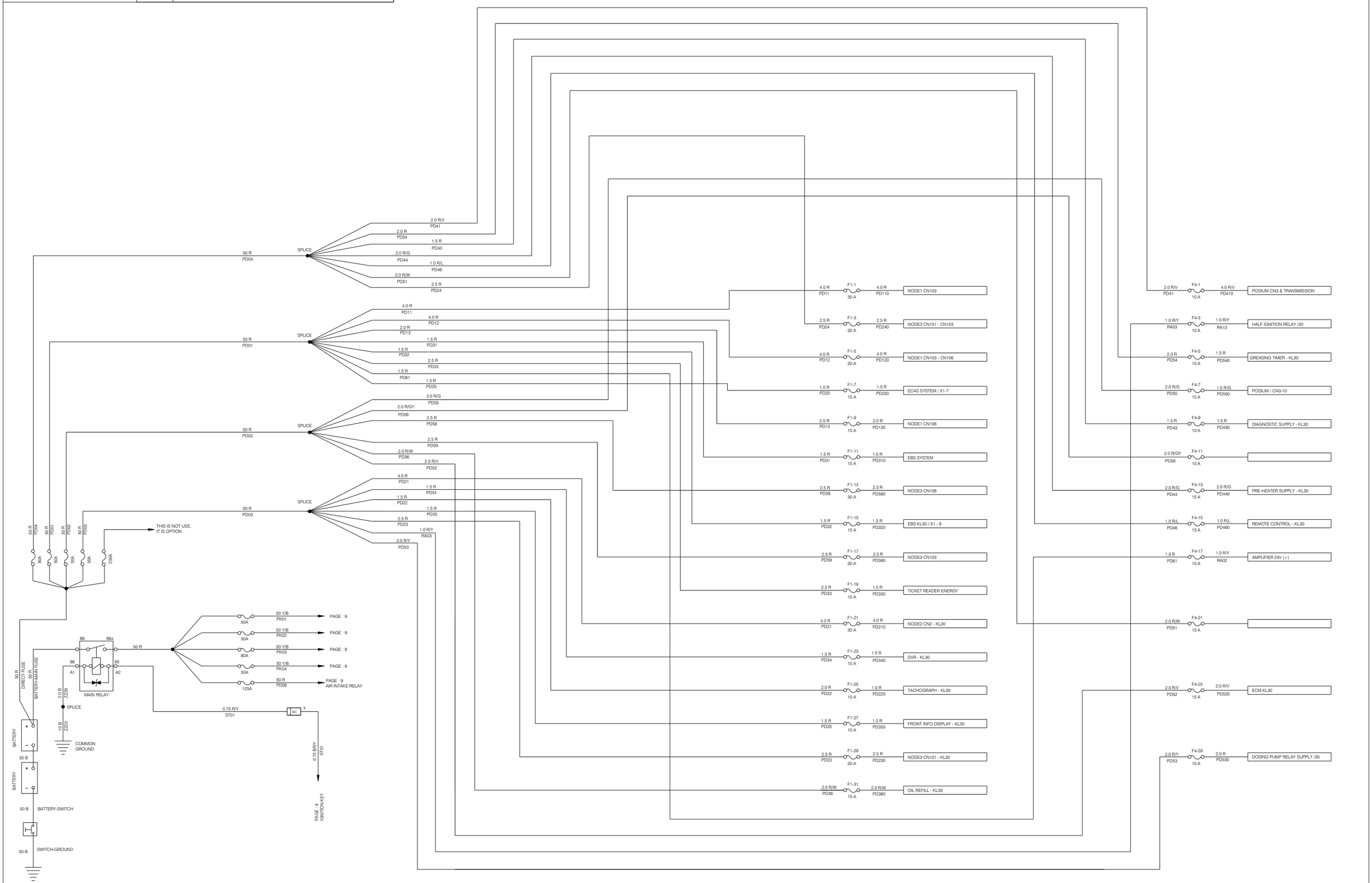

BU BELGE ANADOLU ISUZU OTOMOTIV SANAYI VE TIC. AS. NIN YAZILI IZNI OLMADAN HICBIR SEKILDE KOPYALANAMAZ.THIS DOCUMENT CAN NOT BE REPRODUCED WITHOUT WRITTEN PERMISSION OF ANADOLU ISUZU OTOMOTIV SANAYI VE TIC. AS.

ANADOLU ISUZU
ANADOLU ISUZU OTOMOTIV SANAYI VE TICARET A.S.

SAYFA NO / SHEET NO: 9

CITIPORT E6 C
FUSE SYSTEM - 2

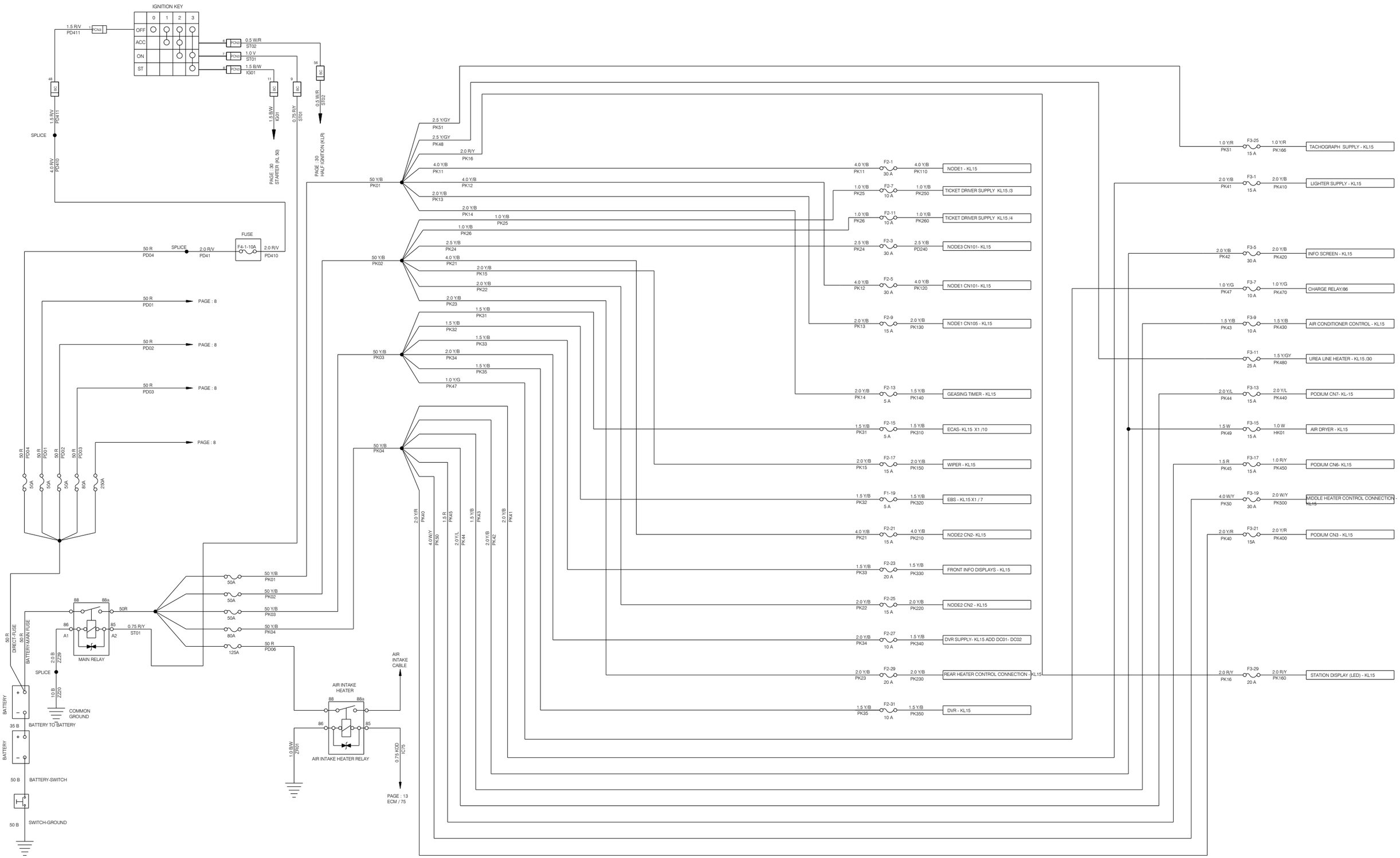

BU BELGE ANADOLU ISUZU OTOMOTIV SANAYI VE TIC. AS. NIN YAZILI IZNI OLMADAN HICBIR SEKILDE KOPYALANAMAZ.THIS DOCUMENT CAN NOT BE REPRODUCED WITHOUT WRITTEN PERMISSION OF ANADOLU ISUZU OTOMOTIV SANAYI VE TIC. AS.

ANADOLU ISUZU
ANADOLU ISUZU OTOMOTIV SANAYI VE TICARET A.S.

SAYFA NO / SHEET NO: 10

CITIPORT E6 C
NODE1 SYSTEM

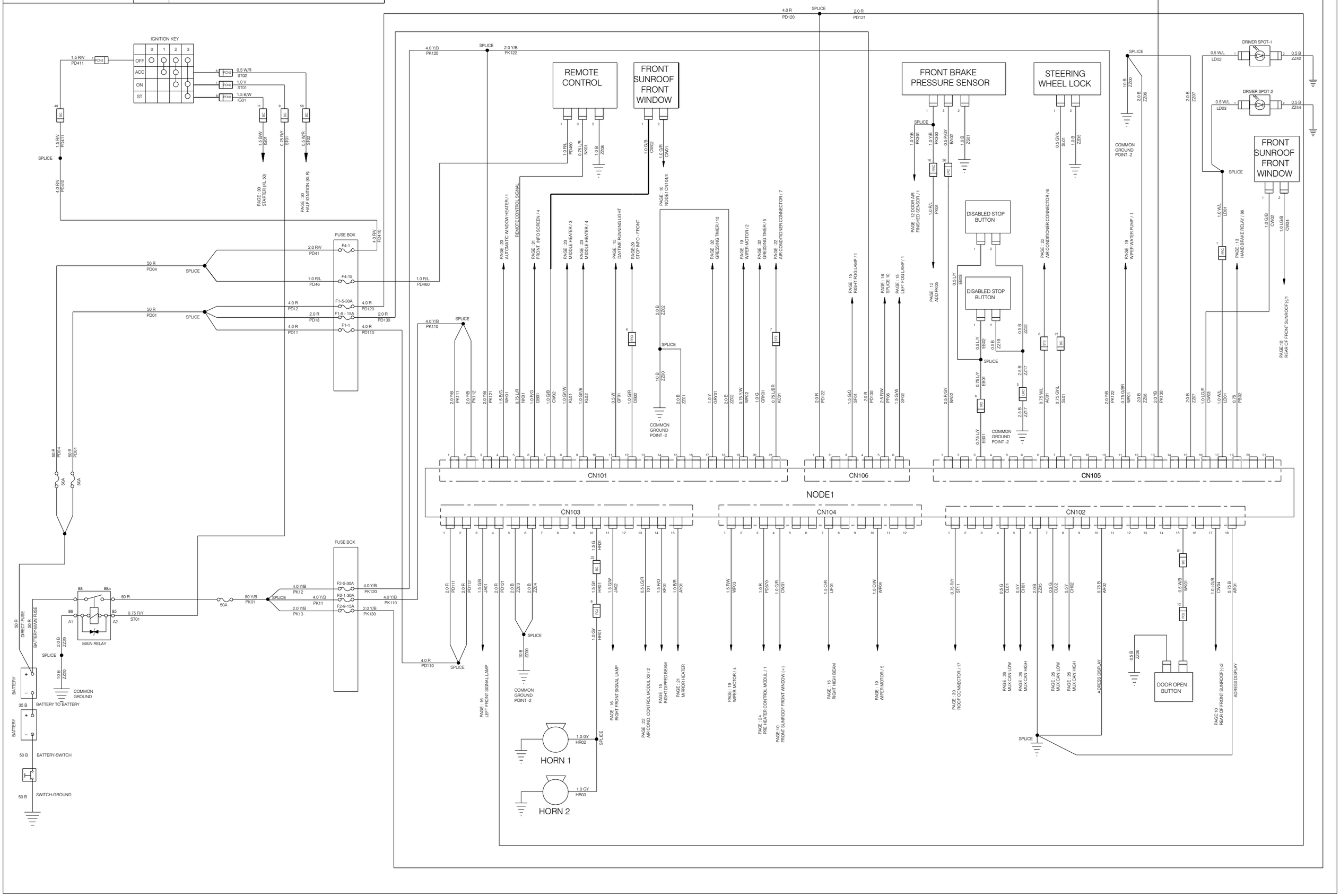

BU BELGE ANADOLU ISUZU OTOMOTIV SANAYI VE TIC. AS. NIN YAZILI IZNI OLMADAN HICBIR SEKILDE KOPYALANAMAZ.THIS DOCUMENT CAN NOT BE REPRODUCED WITHOUT WRITTEN PERMISSION OF ANADOLU ISUZU OTOMOTIV SANAYI VE TIC. AS.

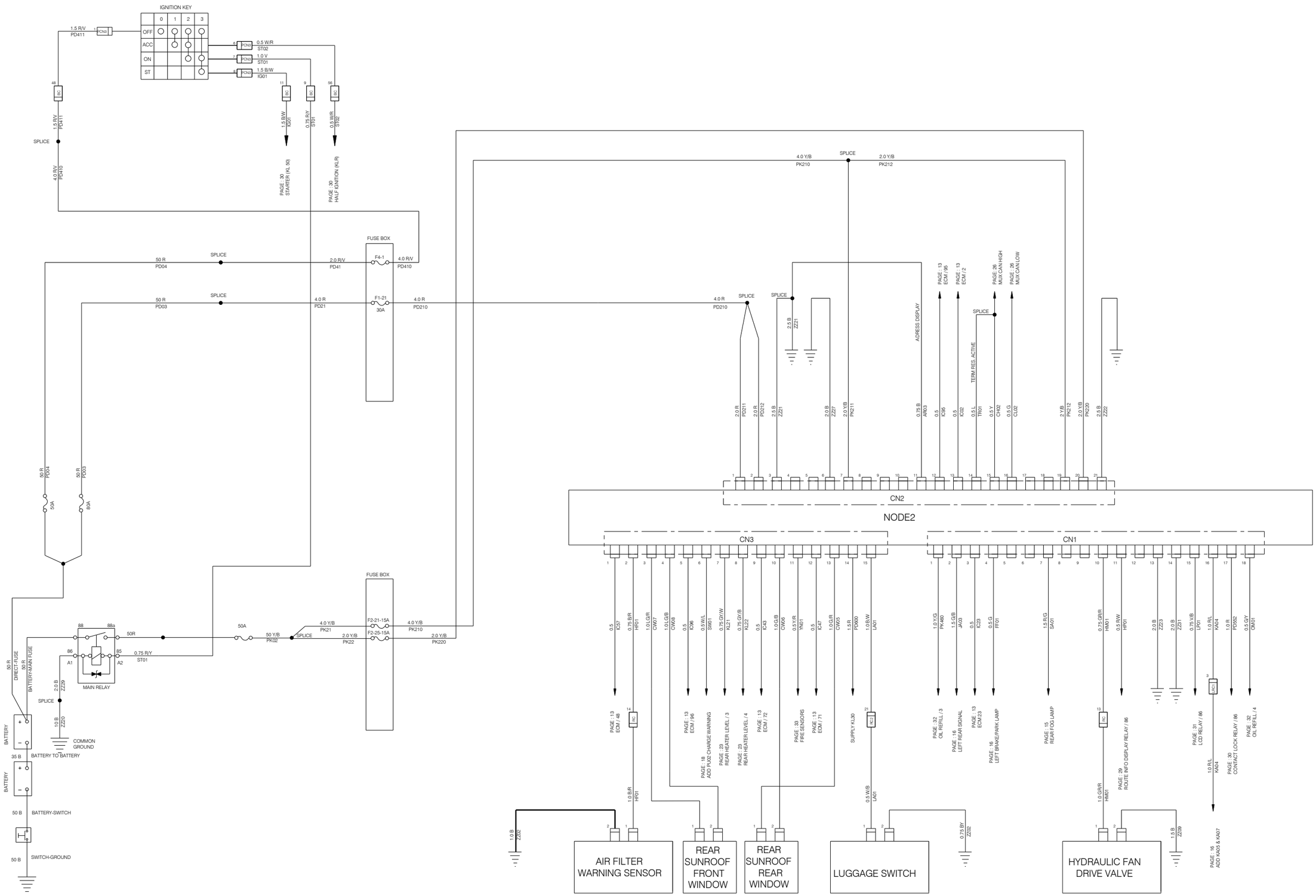

BU BELGE ANADOLU ISUZU OTOMOTİV SANAYİ VE TİC. AS. NIN YAZILI İZNİ OLMADAN HİÇBİR ŞEKİLDE KOPYALANAMAZ.THIS DOCUMENT CAN NOT BE REPRODUCED WITHOUT WRITTEN PERMISSION OF ANADOLU ISUZU OTOMOTİV SANAYİ VE TİC. AS.

ANADOLU ISUZU
ANADOLU ISUZU OTOMOTİV SANAYİ VE TİCARET A.S.

SAYFA NO / SHEET NO: 12

CITIPORT E6 C NODE-3

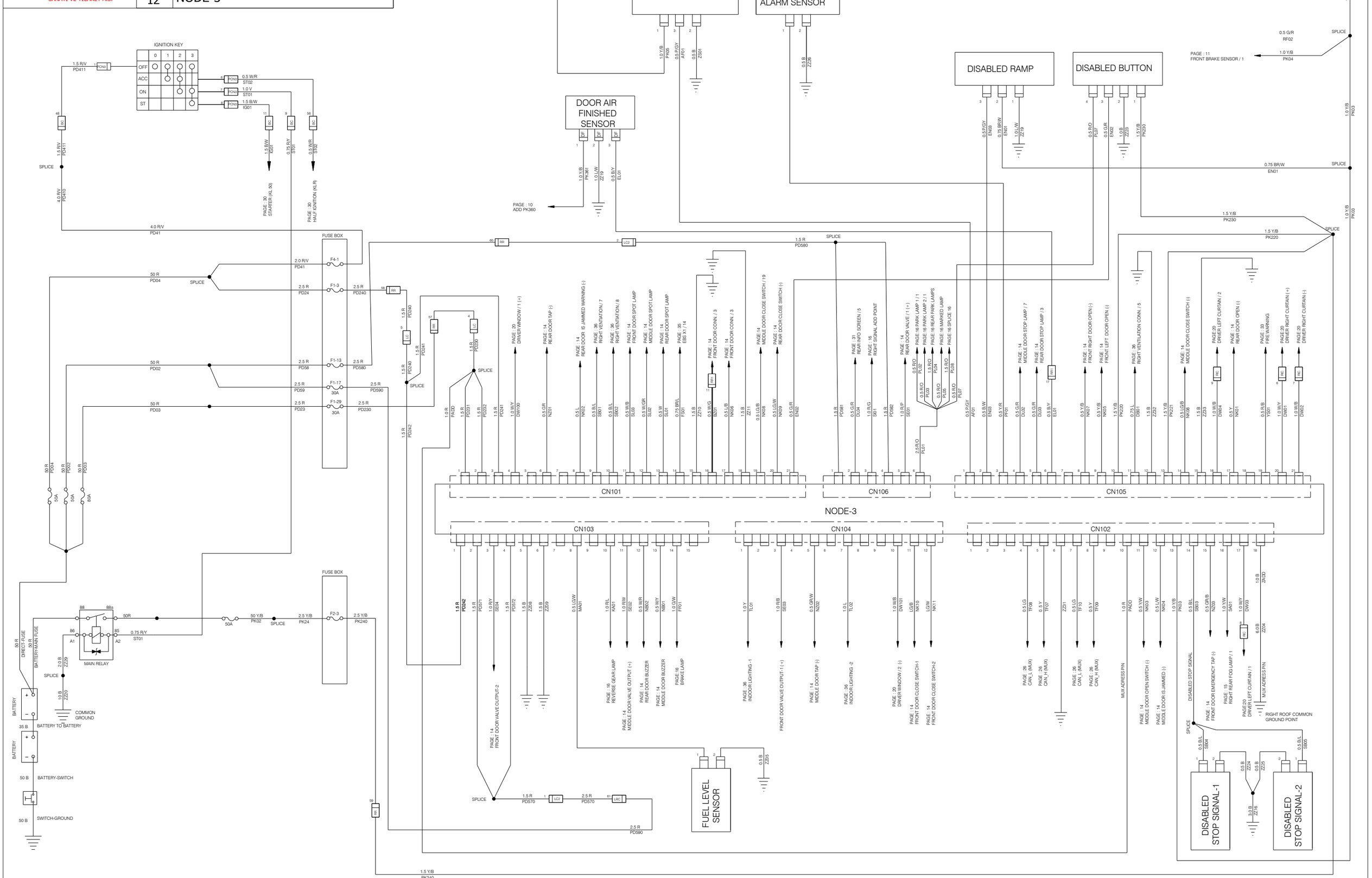

BU BELGE ANADOLU ISUZU OTOMOTİV SANAYİ VE TİC. AS. NİN YAZILI İZNİ OLMADAN HİÇBİR ŞEKİLDE KOPYALANAMAZ.THIS DOCUMENT CAN NOT BE REPRODUCED WITHOUT WRITTEN PERMISSION OF ANADOLU ISUZU OTOMOTİV SANAYİ VE TİC. AS.

ANADOLU ISUZU
ANADOLU ISUZU OTOMOTİV SANAYİ VE TİCARET A.S.

SAYFA NO / SHEET NO: 13

CITIPORT E6 C
ECM SYSTEM

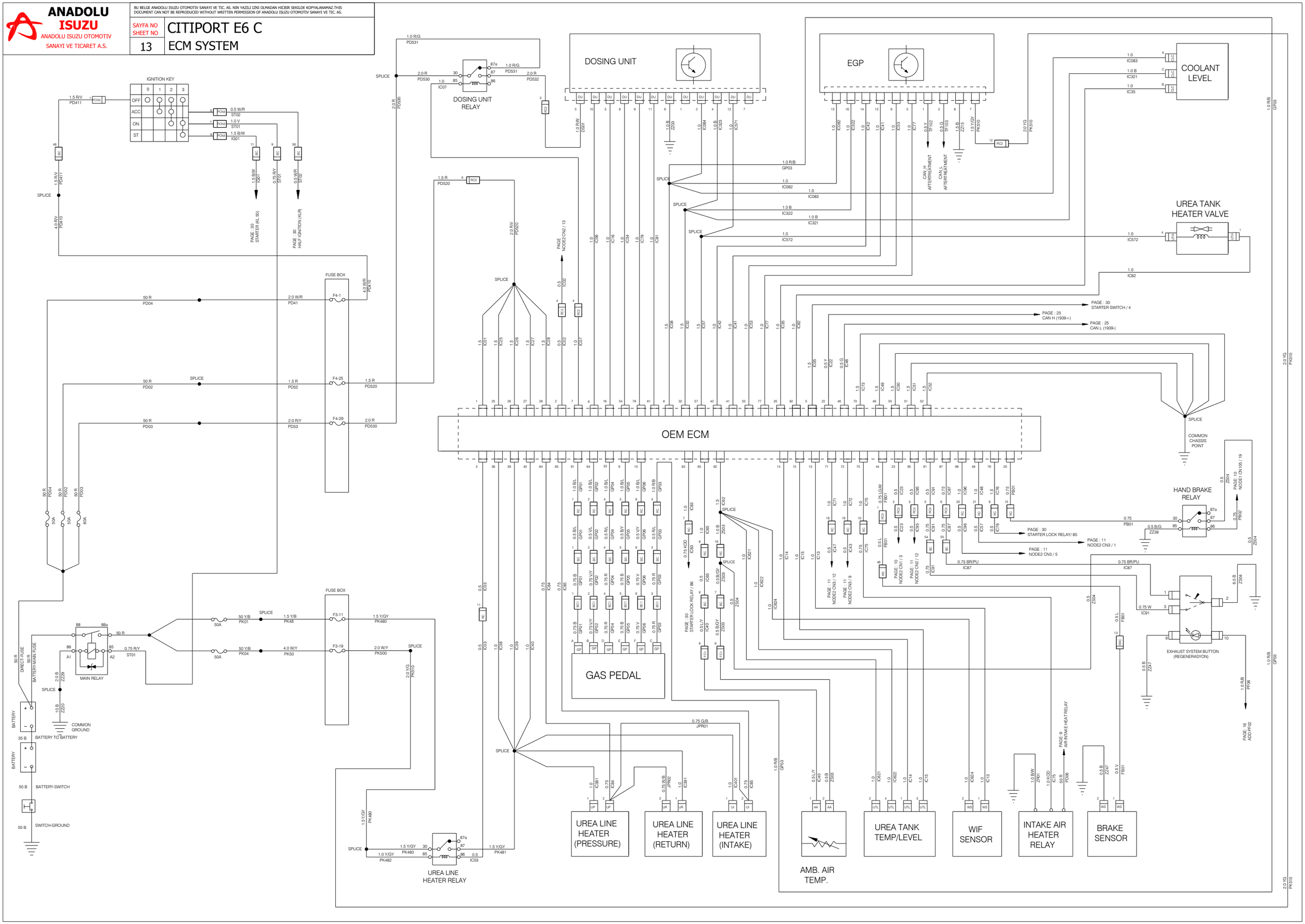

F-MUH-038 REV0

BU BELGE ANADOLU ISUZU OTOMOTIV SANAYI VE TIC. AS. NIN YAZILI IZNI OLMADAN HICBIR SEKILDE KOPYALANAMAZ.THIS DOCUMENT CAN NOT BE REPRODUCED WITHOUT WRITTEN PERMISSION OF ANADOLU ISUZU OTOMOTIV SANAYI VE TIC. AS.

ANADOLU ISUZU
ANADOLU ISUZU OTOMOTIV SANAYI VE TICARET A.S.

SAYFA NO / SHEET NO: 14

CITIPORT E6 C
DOOR CONTROL

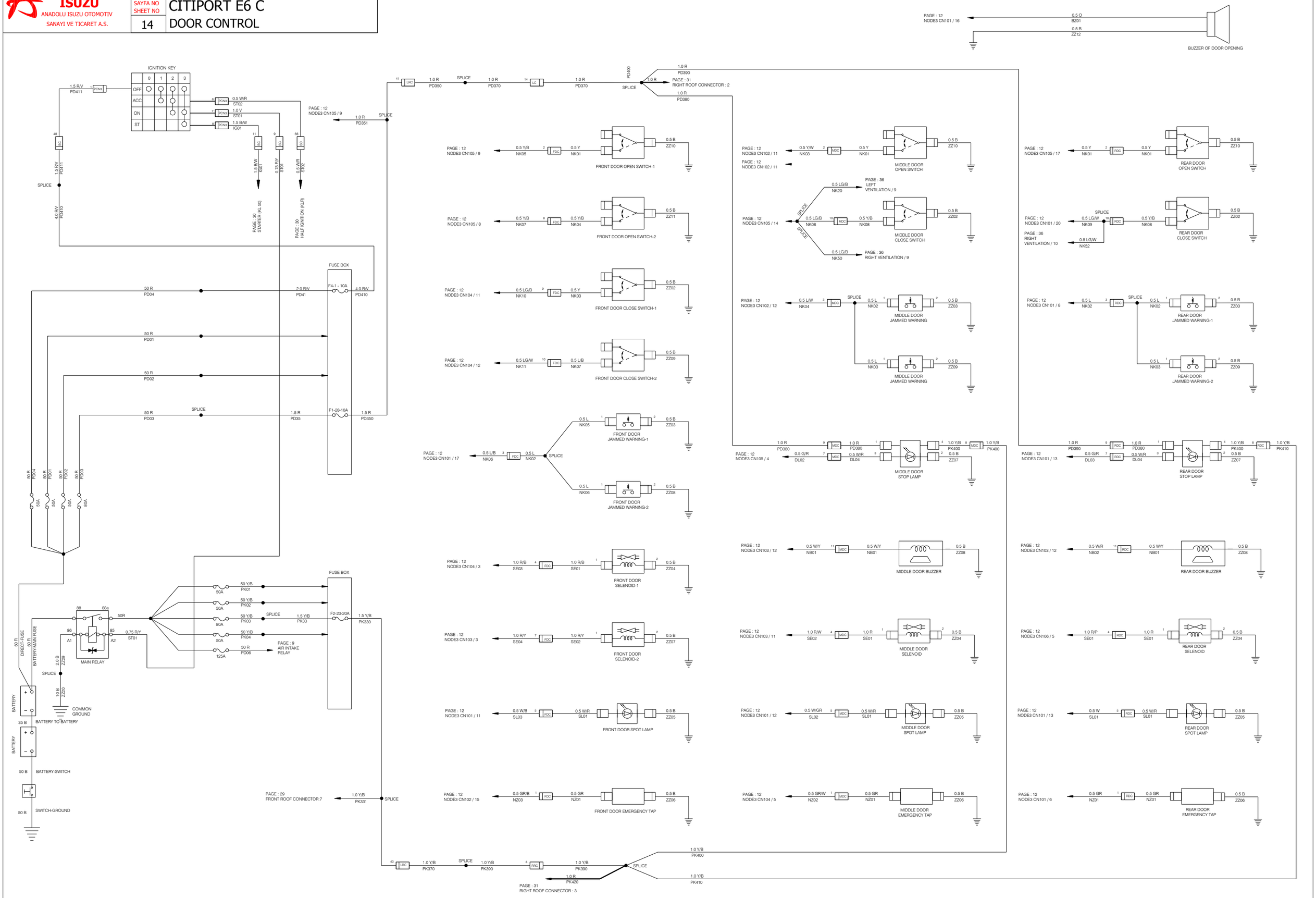

F-MUH-038 REV0

BU BELGE ANADOLU ISUZU OTOMOTIV SANAYI VE TIC. AS. NIN YAZILI IZNI OLMADAN HICBIR SEKILDE KOPYALANAMAZ.THIS DOCUMENT CAN NOT BE REPRODUCED WITHOUT WRITTEN PERMISSION OF ANADOLU ISUZU OTOMOTIV SANAYI VE TIC. AS.

CITIPORT E6 C
HEADLIGHTS & FOG SYSTEM

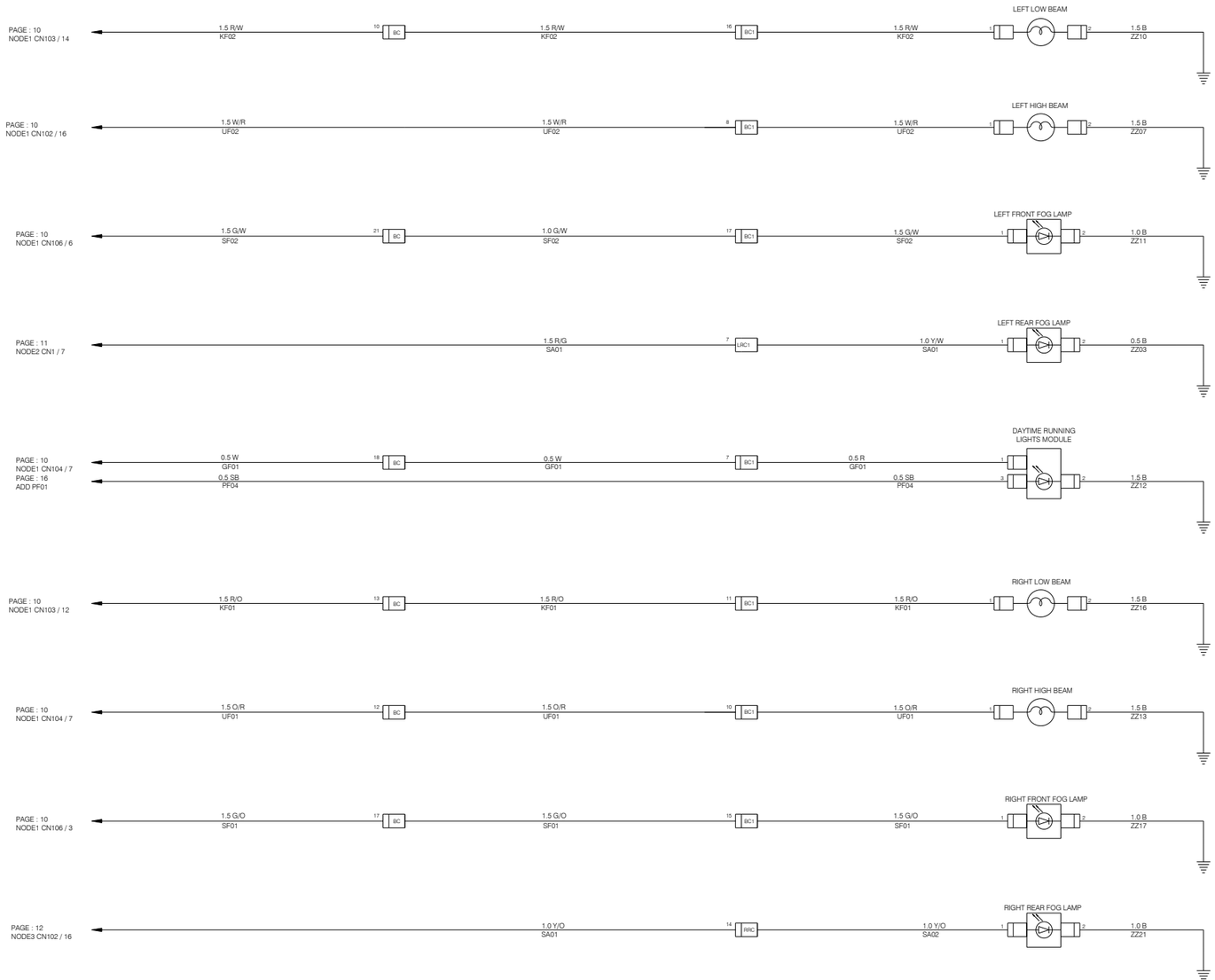

BU BELGE ANADOLU ISUZU OTOMOTIV SANAYI VE TIC. AS. NIN YAZILI IZNI OLMADAN HICBIR SEKILDE KOPYALANAMAZ.THIS DOCUMENT CAN NOT BE REPRODUCED WITHOUT WRITTEN PERMISSION OF ANADOLU ISUZU OTOMOTIV SANAYI VE TIC. AS.

ANADOLU ISUZU
ANADOLU ISUZU OTOMOTIV SANAYI VE TICARET A.S.

SAYFA NO / SHEET NO: 16

CITIPORT E6 C
PARKING - SIGNAL LIGHTS

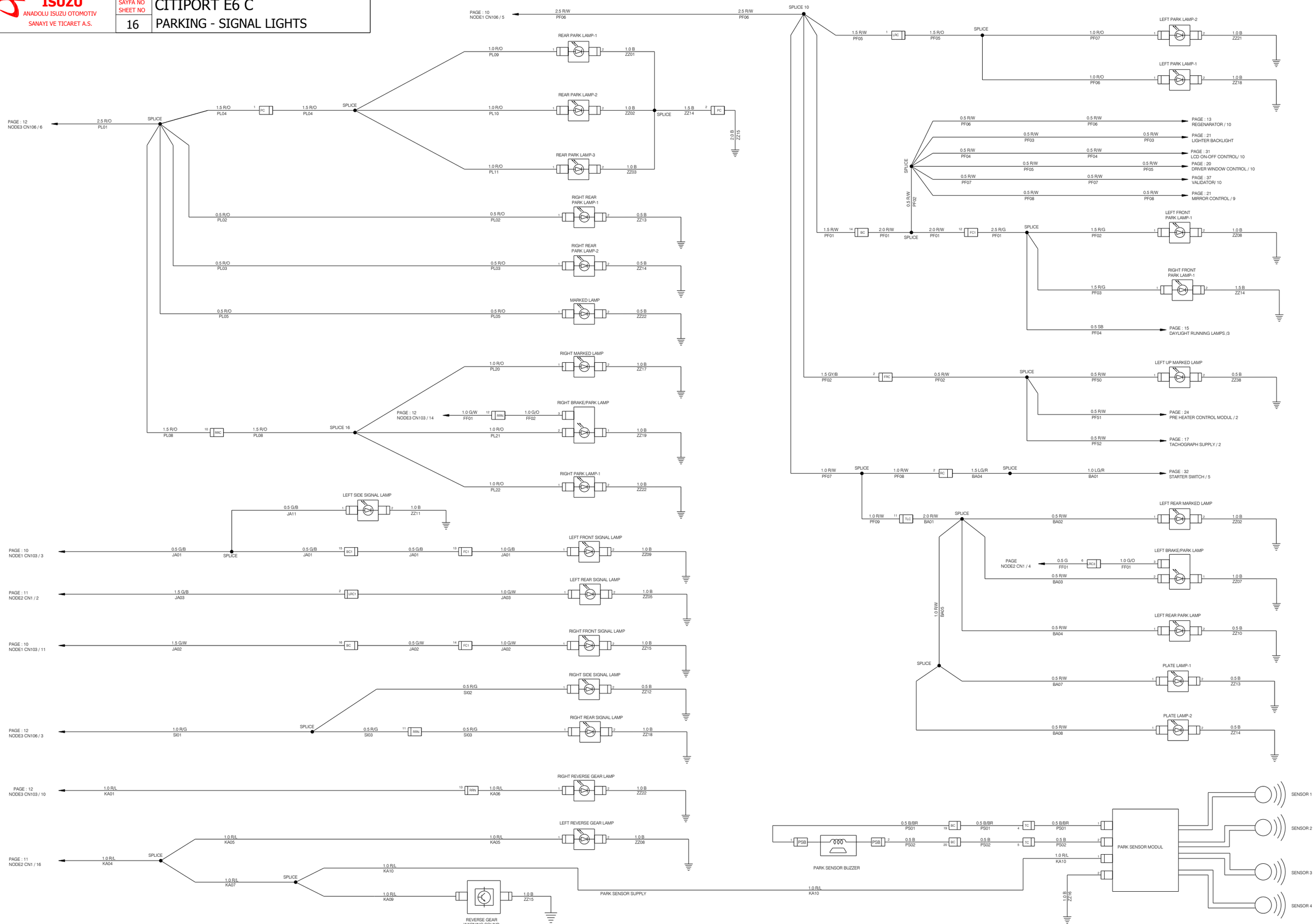

BU BELGE ANADOLU ISUZU OTOMOTIV SANAYI VE TIC. AS. NIN YAZILI IZNI OLMADAN HICBIR SEKILDE KOPYALANAMAZ.THIS DOCUMENT CAN NOT BE REPRODUCED WITHOUT WRITTEN PERMISSION OF ANADOLU ISUZU OTOMOTIV SANAYI VE TIC. AS.

CITIPORT E6 C
TACHOGRAPH

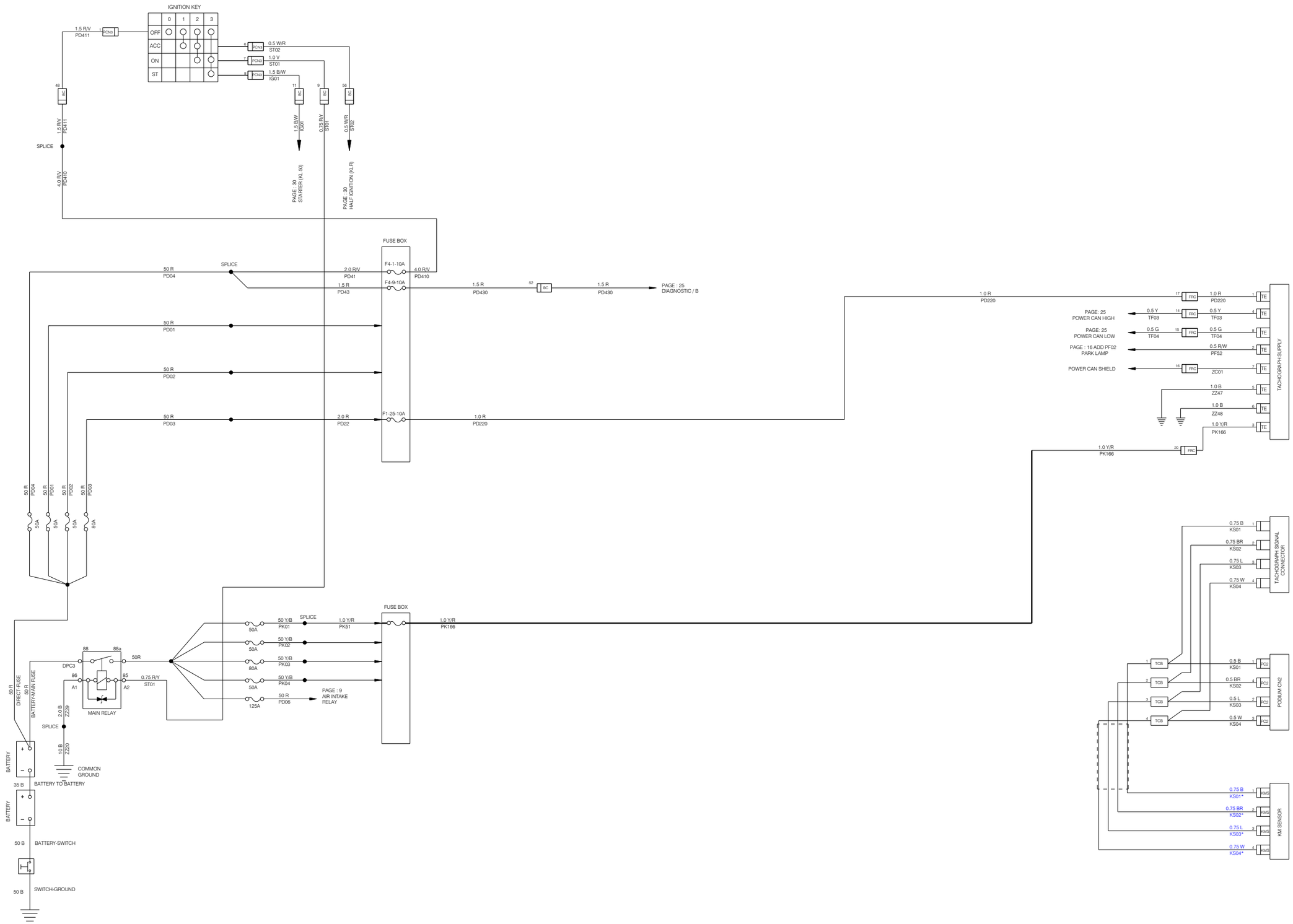

*DESCRIPTION : IF VEHICLE HAS TACHOGRAPH, *MARKED CABLES GO TO TACHOGRAPH. OTHERWISE, * MARKED CABLES GO TO PODIUM.

BU BELGE ANADOLU ISUZU OTOMOTIV SANAYI VE TIC. AS. NIN YAZILI IZNI OLMADAN HICBIR SEKILDE KOPYALANAMAZ.THIS DOCUMENT CAN NOT BE REPRODUCED WITHOUT WRITTEN PERMISSION OF ANADOLU ISUZU OTOMOTIV SANAYI VE TIC. AS.

CITIPORT E6 C
CHARGE SYSTEM

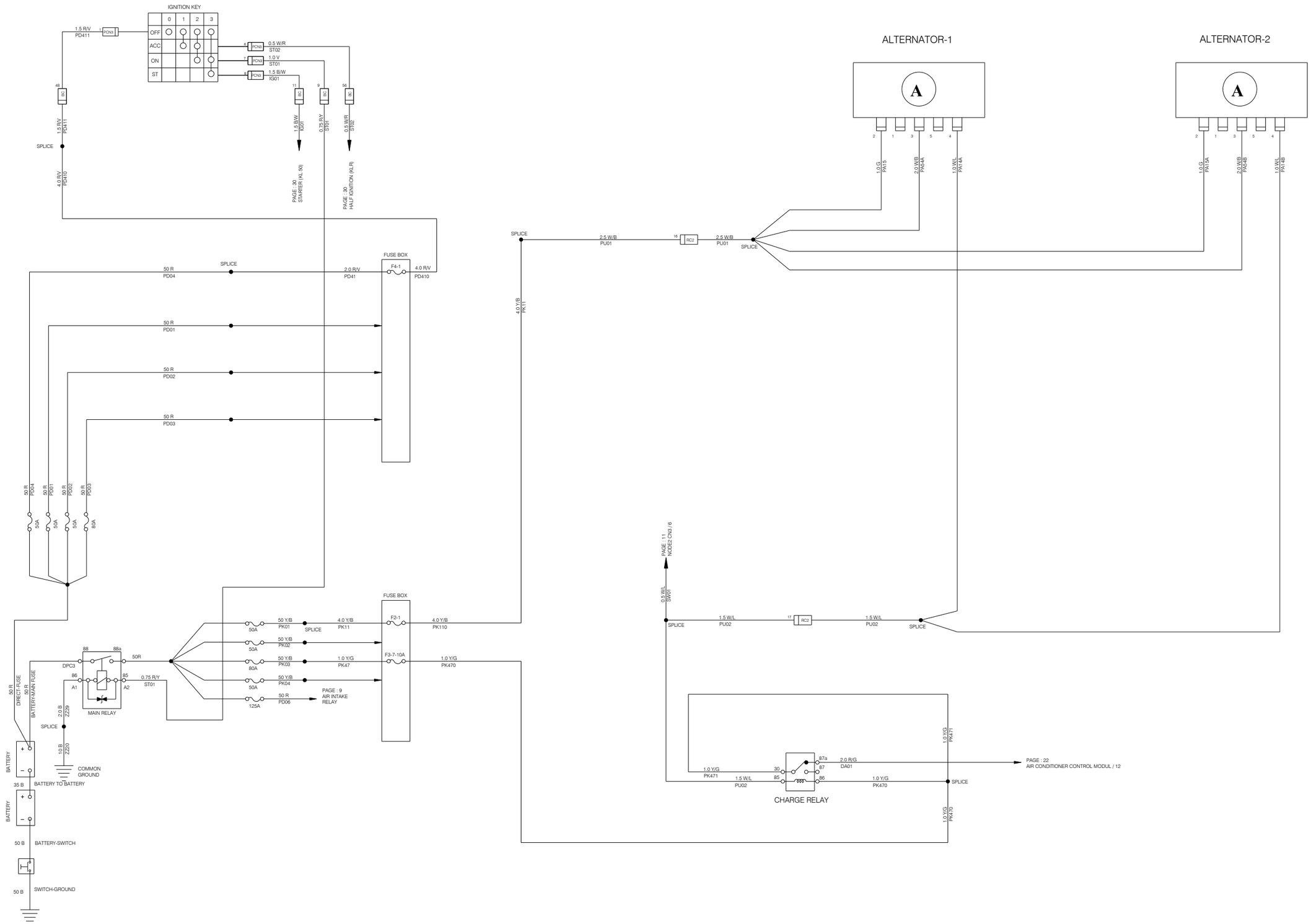

BU BELGE ANADOLU ISUZU OTOMOTIV SANAYI VE TIC. AS. NIN YAZILI IZNI OLMADAN HICBIR SEKILDE KOPYALANAMAZ.THIS DOCUMENT CAN NOT BE REPRODUCED WITHOUT WRITTEN PERMISSION OF ANADOLU ISUZU OTOMOTIV SANAYI VE TIC. AS.

SAYFA NO
SHEET NO
19

CITIPORT E6 C
WIPER SYSTEM

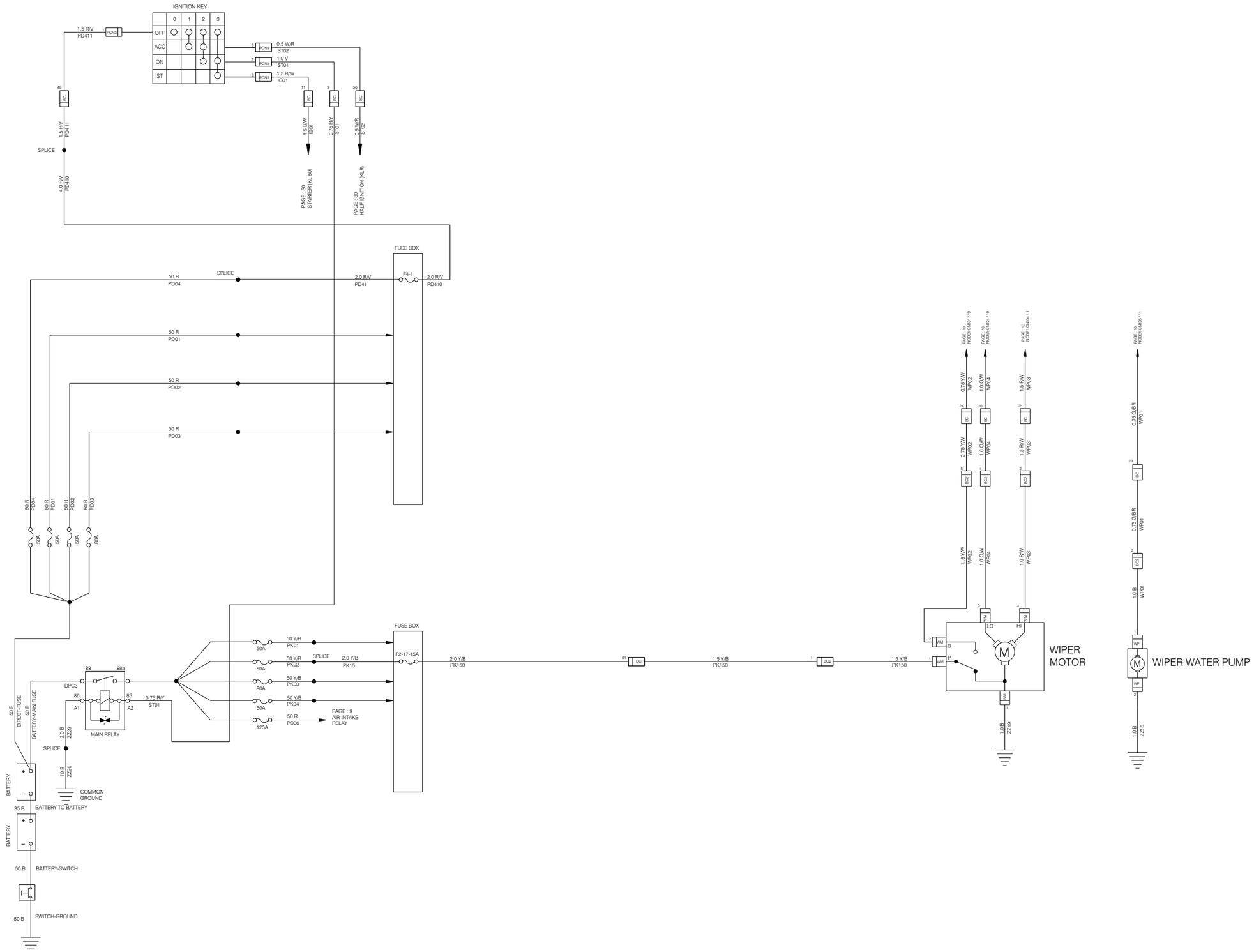

BU BELGE ANADOLU ISUZU OTOMOTIV SANAYI VE TIC. AS. NIN YAZILI IZNI OLMADAN HICBIR SEKILDE KOPYALANAMAZ.THIS DOCUMENT CAN NOT BE REPRODUCED WITHOUT WRITTEN PERMISSION OF ANADOLU ISUZU OTOMOTIV SANAYI VE TIC. AS.

CITIPORT E6 C
AUTOMATIC DRIVER WINDOW

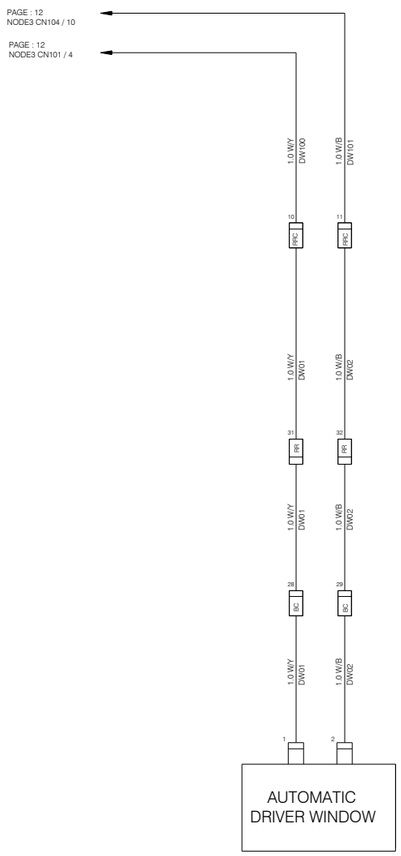

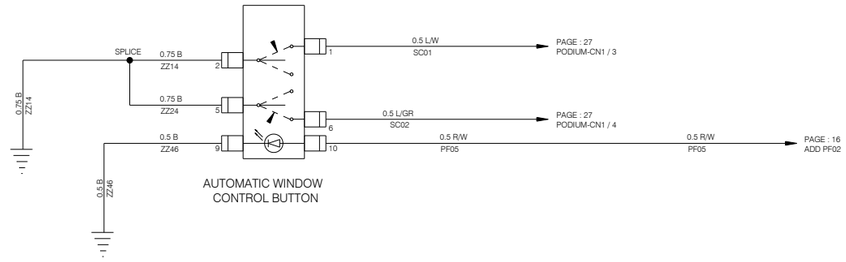

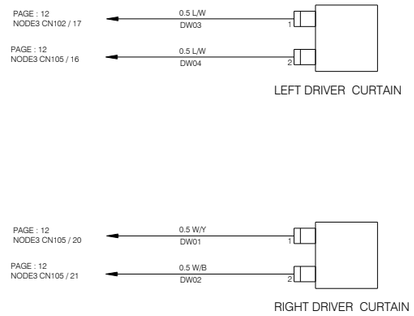

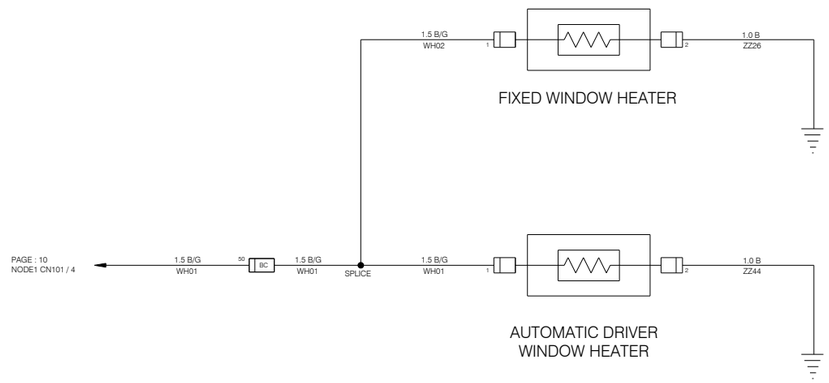

BU BELGE ANADOLU ISUZU OTOMOTIV SANAYI VE TIC. AS. NIN YAZILI IZNI OLMADAN HICBIR SEKILDE KOPYALANAMAZ.THIS DOCUMENT CAN NOT BE REPRODUCED WITHOUT WRITTEN PERMISSION OF ANADOLU ISUZU OTOMOTIV SANAYI VE TIC. AS.

ANADOLU ISUZU
ANADOLU ISUZU OTOMOTIV SANAYI VE TICARET A.S.

SAYFA NO / SHEET NO: 21

CITIPORT E6 C
AUTOMATIC MIRROR & LIGHTER

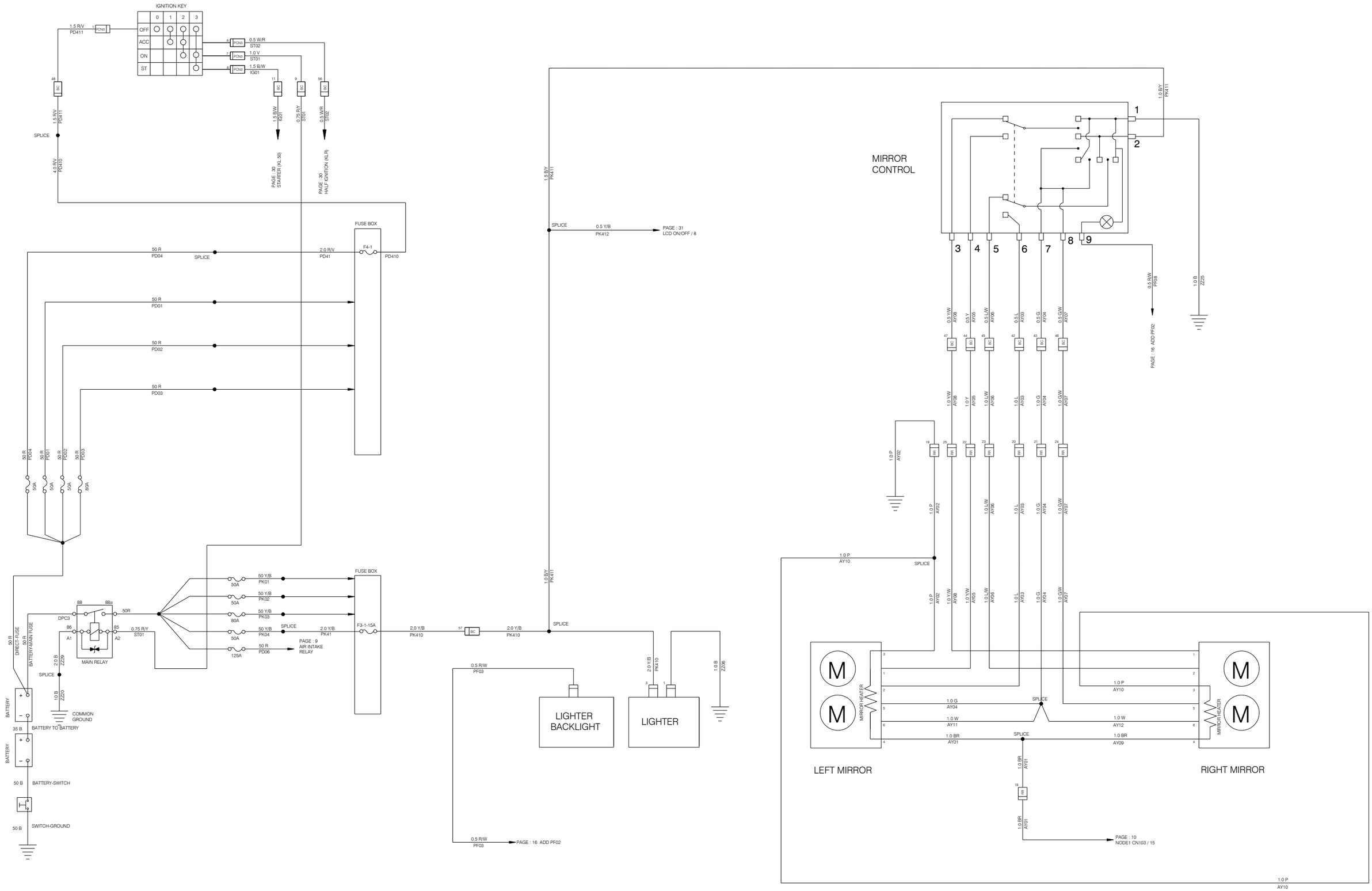

BU BELGE ANADOLU ISUZU OTOMOTIV SANAYI VE TIC. AS. NIN YAZILI IZNI OLMADAN HICBIR SEKILDE KOPYALANAMAZ.THIS DOCUMENT CAN NOT BE REPRODUCED WITHOUT WRITTEN PERMISSION OF ANADOLU ISUZU OTOMOTIV SANAYI VE TIC. AS.

ANADOLU ISUZU
ANADOLU ISUZU OTOMOTIV SANAYI VE TICARET A.S.

SAYFA NO / SHEET NO: 22

CITIPORT E6 C
AIR CONDITIONER SYSTEM

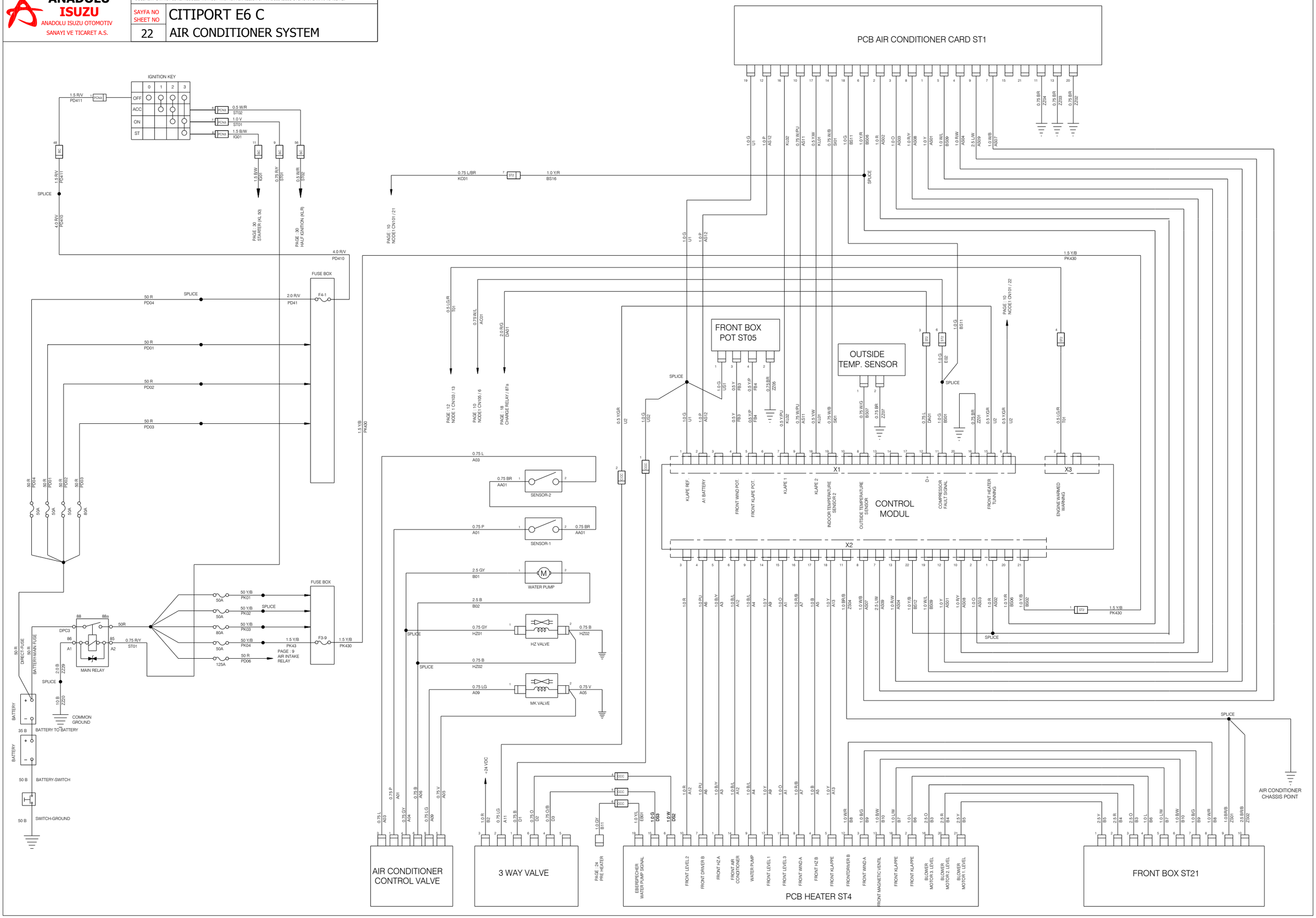

BU BELGE ANADOLU ISUZU OTOMOTIV SANAYI VE TIC. AS. NIN YAZILI IZNI OLMADAN HICBIR SEKILDE KOPYALANAMAZ.THIS DOCUMENT CAN NOT BE REPRODUCED WITHOUT WRITTEN PERMISSION OF ANADOLU ISUZU OTOMOTIV SANAYI VE TIC. AS.

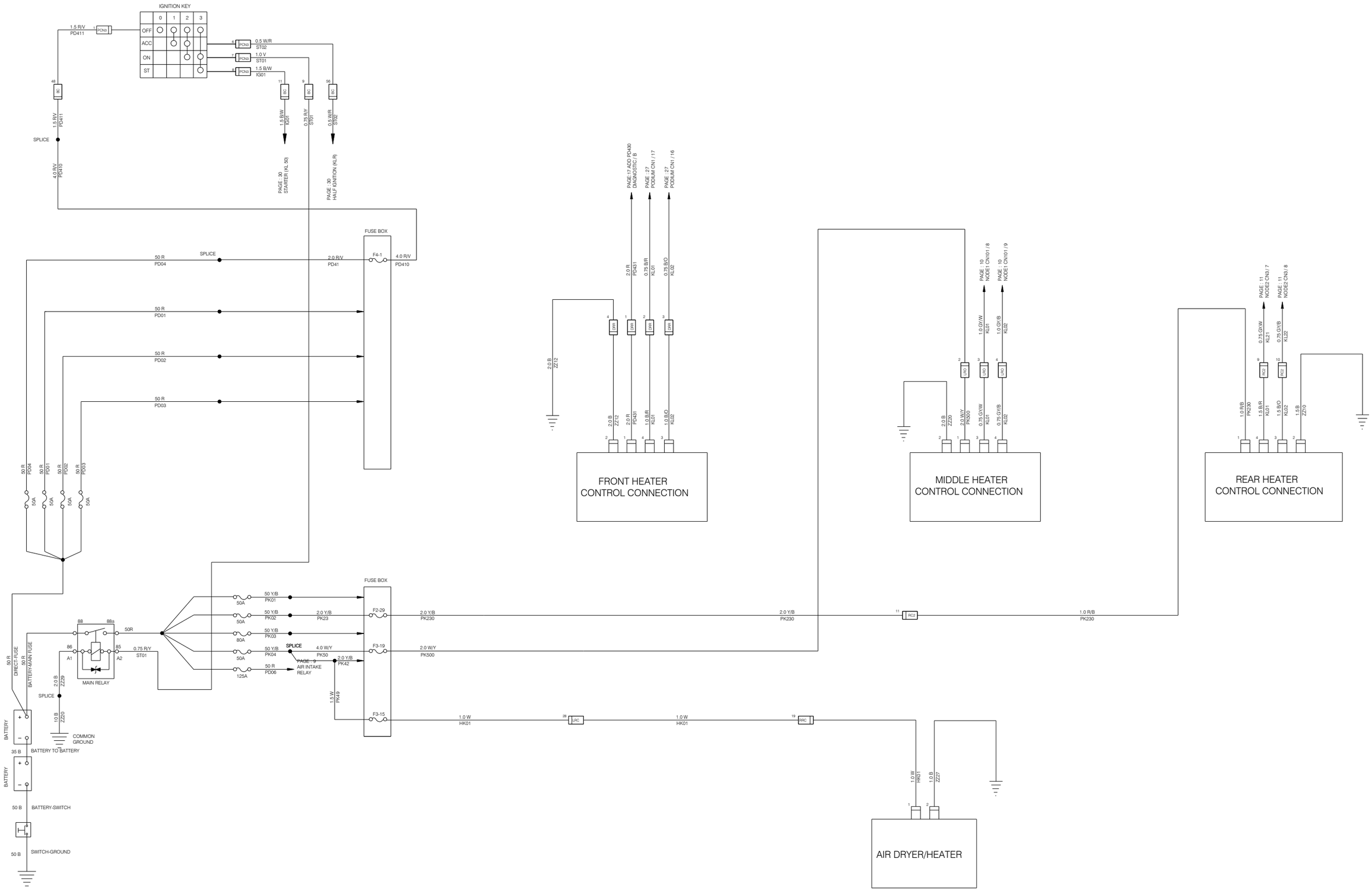

BU BELGE ANADOLU ISUZU OTOMOTIV SANAYI VE TIC. AS. NIN YAZILI IZNI OLMADAN HICBIR SEKILDE KOPYALANAMAZ.THIS DOCUMENT CAN NOT BE REPRODUCED WITHOUT WRITTEN PERMISSION OF ANADOLU ISUZU OTOMOTIV SANAYI VE TIC. AS.

SAYFA NO
SHEET NO
24

CITIPORT E6 C
PRE HEATER (EBERSPACHER)

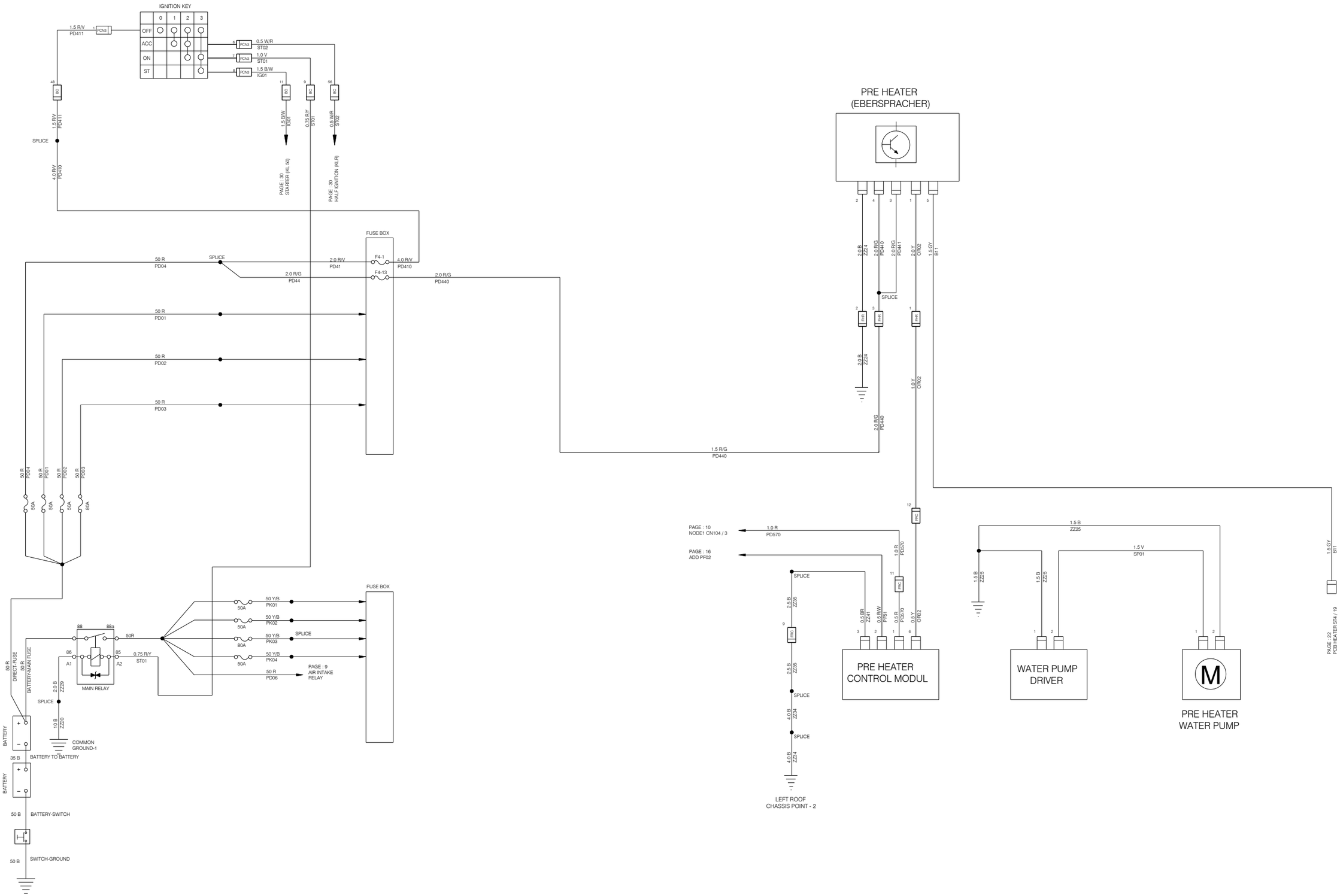

BU BELGE ANADOLU ISUZU OTOMOTIV SANAYI VE TIC. AS. NIN YAZILI IZNI OLMADAN HICBIR SEKILDE KOPYALANAMAZ.THIS DOCUMENT CAN NOT BE REPRODUCED WITHOUT WRITTEN PERMISSION OF ANADOLU ISUZU OTOMOTIV SANAYI VE TIC. AS.

CITIPORT E6 C
POWER CAN

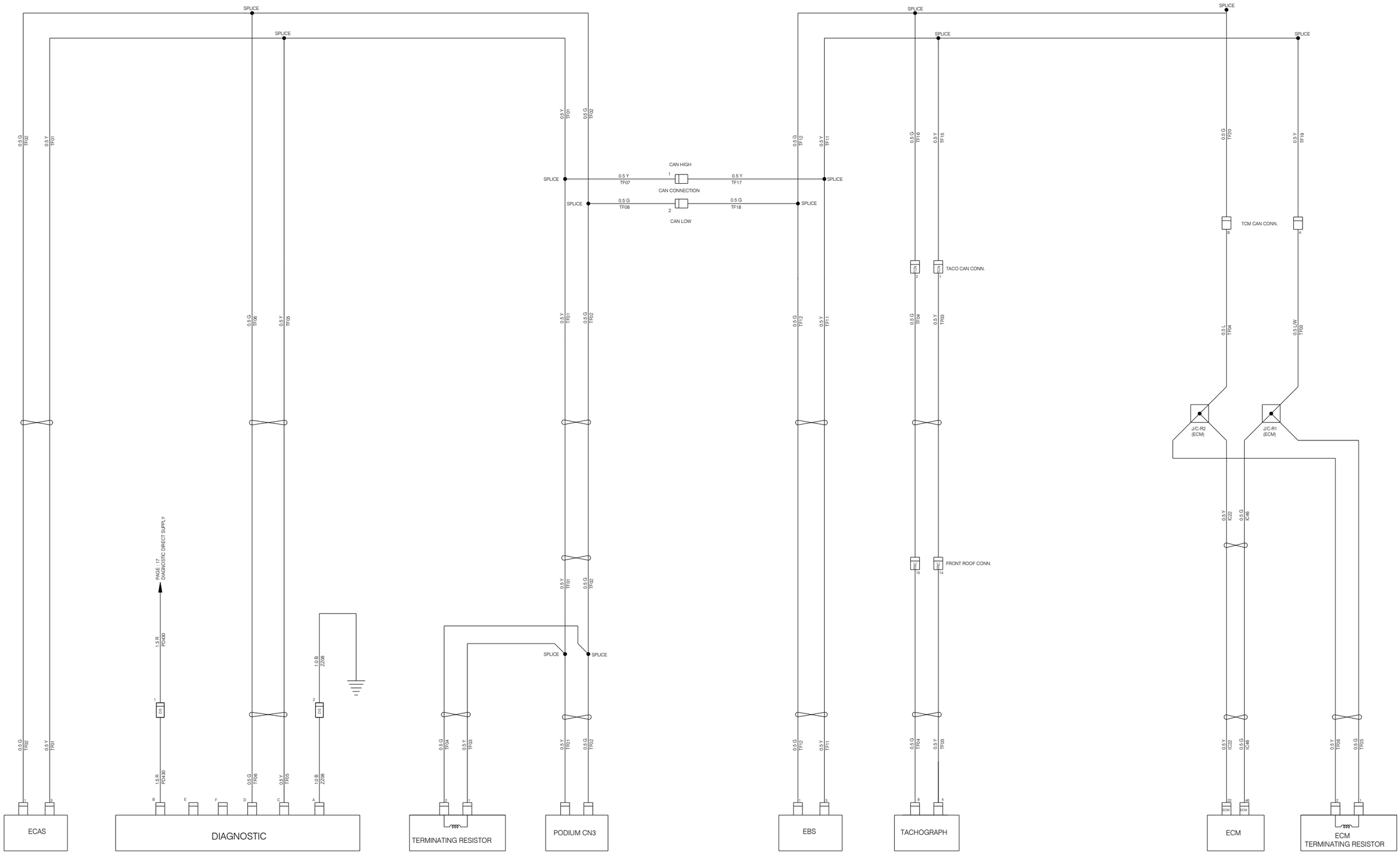

BU BELGE ANADOLU ISUZU OTOMOTIV SANAYI VE TIC. AS. NIN YAZILI IZNI OLMADAN HICBIR SEKILDE KOPYALANAMAZ.THIS DOCUMENT CAN NOT BE REPRODUCED WITHOUT WRITTEN PERMISSION OF ANADOLU ISUZU OTOMOTIV SANAYI VE TIC. AS.

CITIPORT E6 C

MUX CAN

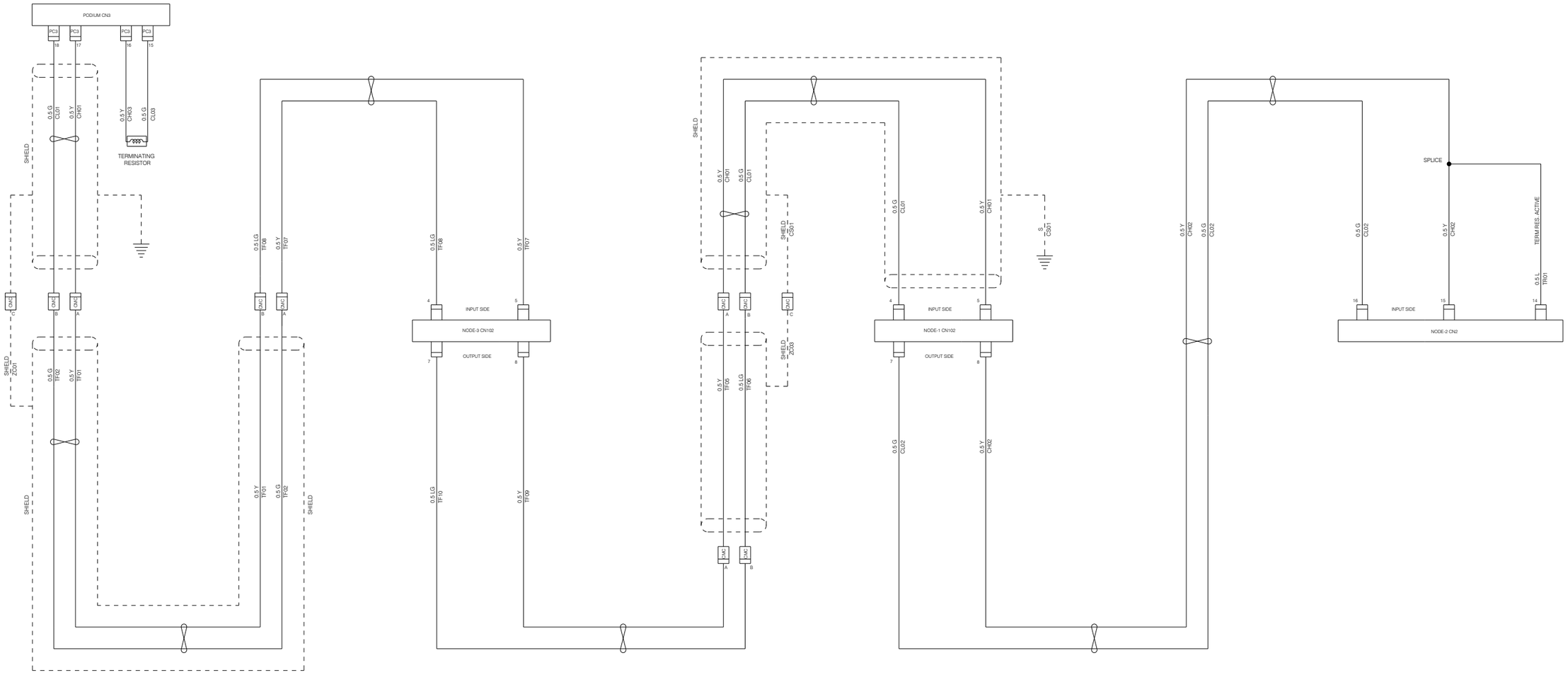

BU BELGE ANADOLU ISUZU OTOMOTIV SANAYI VE TIC. AS. NIN YAZILI IZNI OLMADAN HICBIR SEKILDE KOPYALANAMAZ.THIS DOCUMENT CAN NOT BE REPRODUCED WITHOUT WRITTEN PERMISSION OF ANADOLU ISUZU OTOMOTIV SANAYI VE TIC. AS.

CITIPORT E6 C
PODIUM SYSTEM

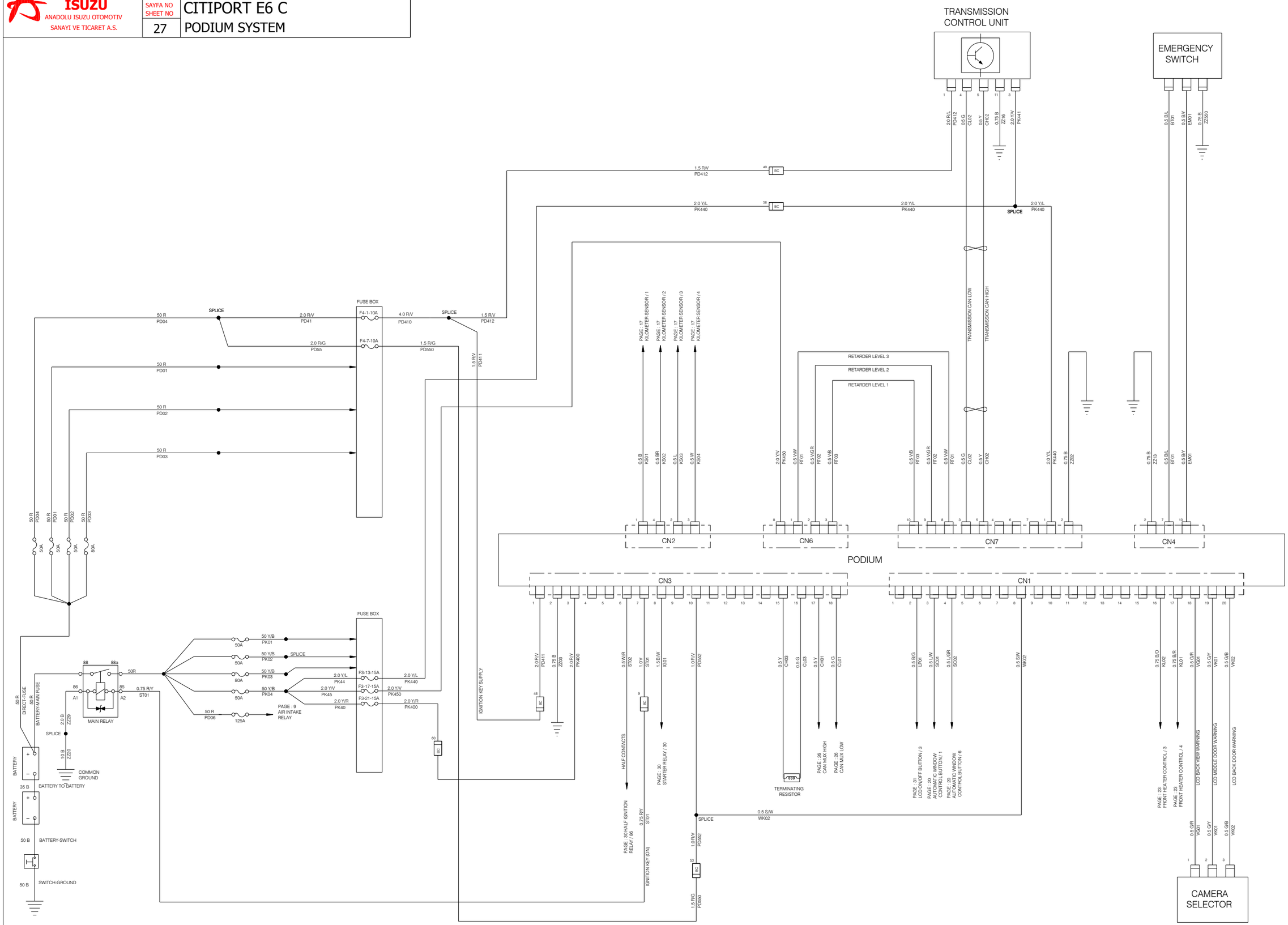

BU BELGE ANADOLU ISUZU OTOMOTIV SANAYI VE TIC. AS. NIN YAZILI IZNI OLMADAN HICBIR SEKILDE KOPYALANAMAZ.THIS DOCUMENT CAN NOT BE REPRODUCED WITHOUT WRITTEN PERMISSION OF ANADOLU ISUZU OTOMOTIV SANAYI VE TIC. AS.

CITIPORT E6 C
CAMERA SYSTEM

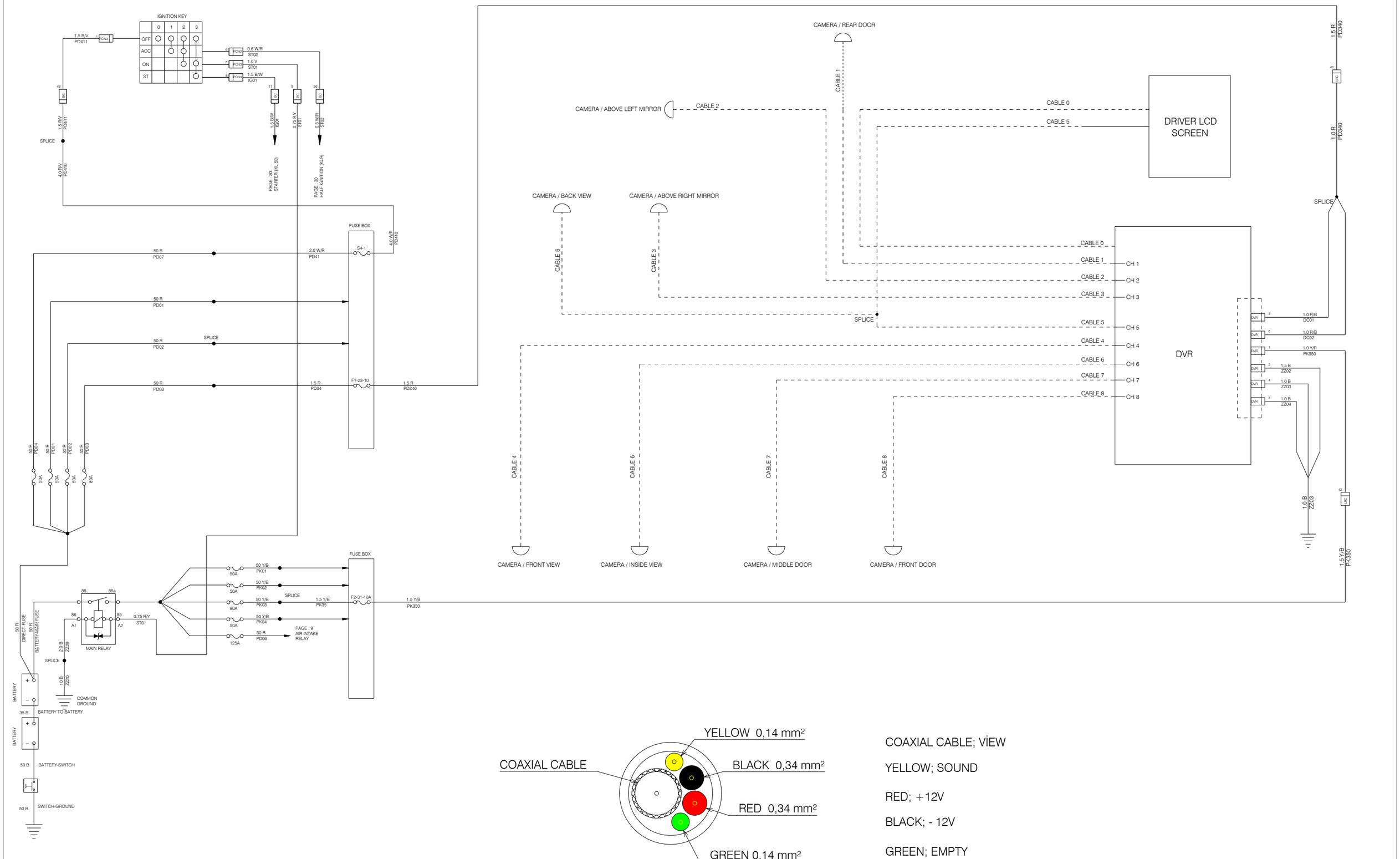

COAXIAL CABLE; VİEW

YELLOW; SOUND

RED; +12V

BLACK; - 12V

GREEN; EMPTY

BU BELGE ANADOLU ISUZU OTOMOTIV SANAYI VE TIC. AS. NIN YAZILI IZNI OLMADAN HICBIR SEKILDE KOPYALANAMAZ.THIS DOCUMENT CAN NOT BE REPRODUCED WITHOUT WRITTEN PERMISSION OF ANADOLU ISUZU OTOMOTIV SANAYI VE TIC. AS.

CITIPORT E6 C
ROUTE INFO DISPLAY

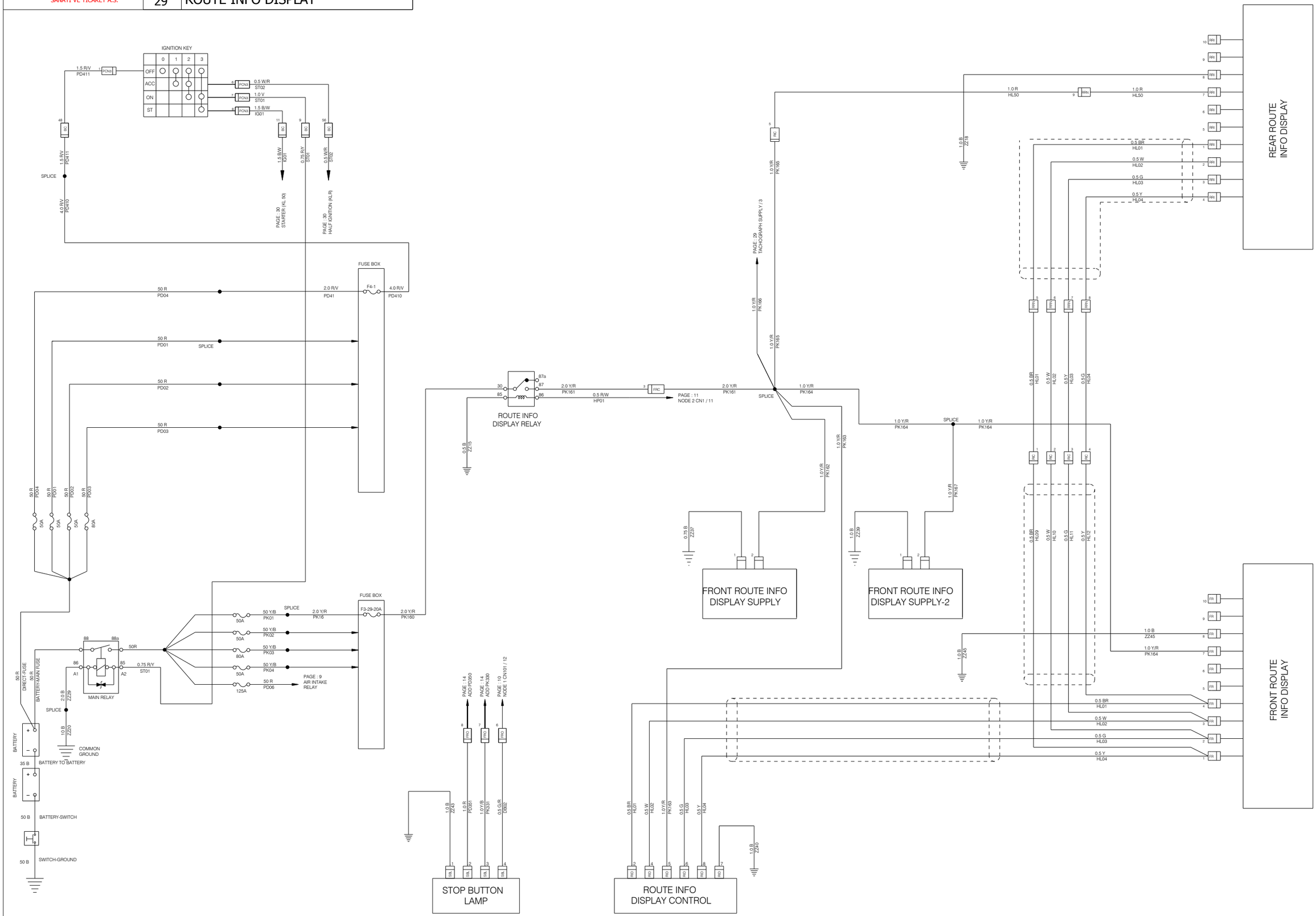

BU BELGE ANADOLU ISUZU OTOMOTIV SANAYI VE TIC. AS. NIN YAZILI IZNI OLMADAN HICBIR SEKILDE KOPYALANAMAZ.THIS DOCUMENT CAN NOT BE REPRODUCED WITHOUT WRITTEN PERMISSION OF ANADOLU ISUZU OTOMOTIV SANAYI VE TIC. AS.

CITIPORT E6 C
STARTER

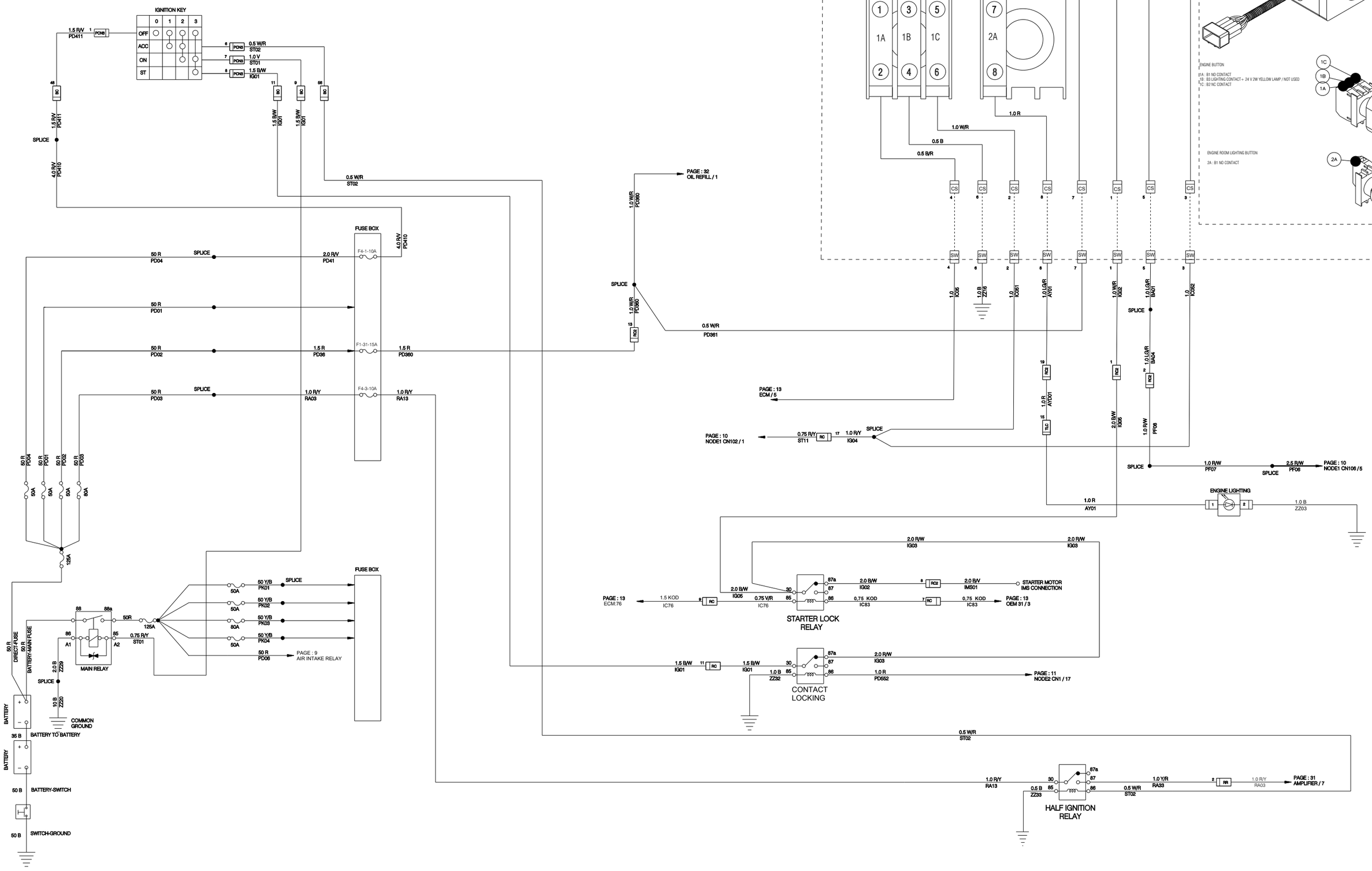

BU BELGE ANADOLU ISUZU OTOMOTIV SANAYI VE TIC. AS. NIN YAZILI IZNI OLMADAN HICBIR SEKILDE KOPYALANAMAZ.THIS DOCUMENT CAN NOT BE REPRODUCED WITHOUT WRITTEN PERMISSION OF ANADOLU ISUZU OTOMOTIV SANAYI VE TIC. AS.

SAYFA NO
SHEET NO
31

CITIPORT E6 C
LCD-RADIO SPEAKER-INFO SCREENS

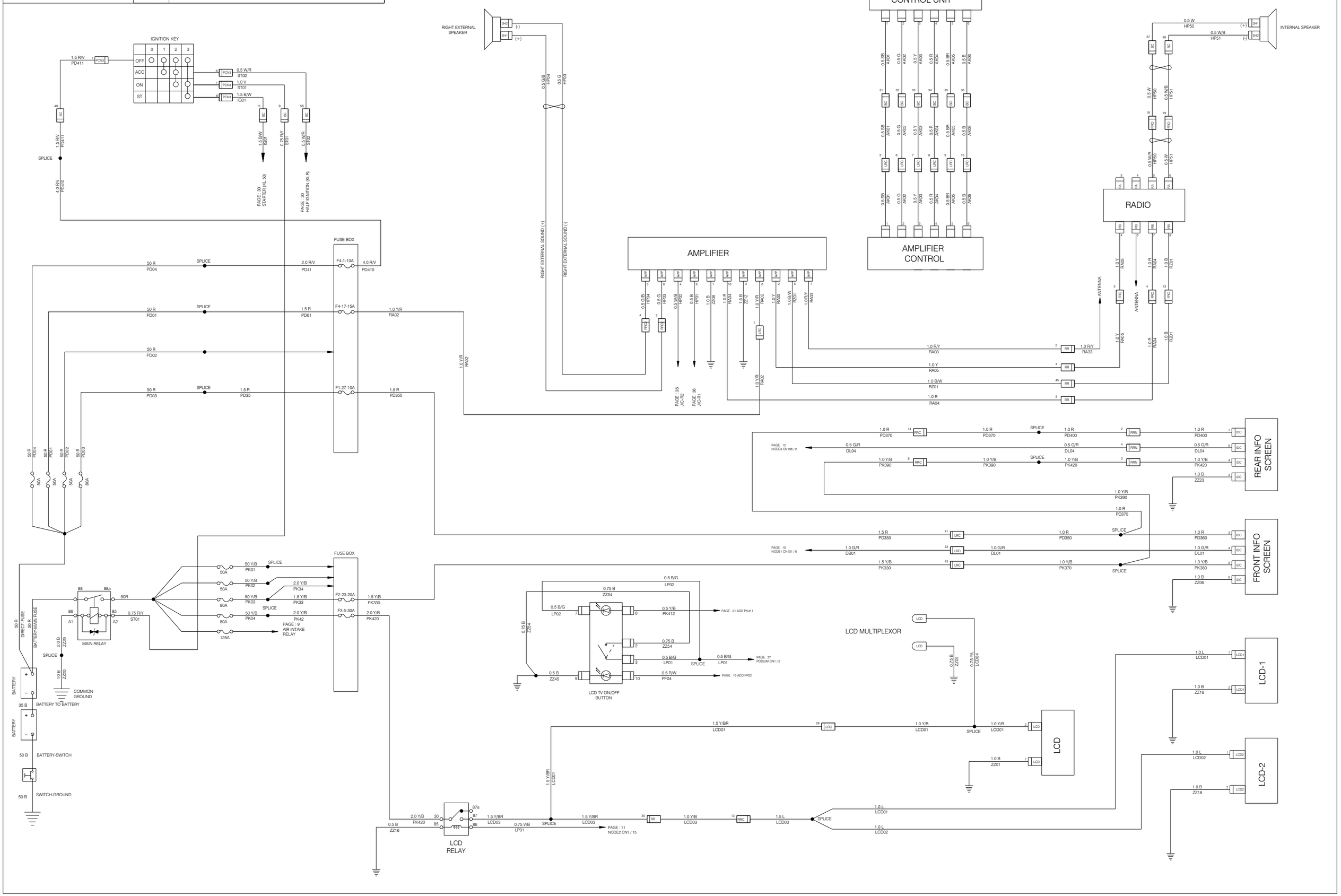

BU BELGE ANADOLU ISUZU OTOMOTIV SANAYI VE TIC. AS. NIN YAZILI IZNI OLMADAN HICBIR SEKILDE KOPYALANAMAZ.THIS DOCUMENT CAN NOT BE REPRODUCED WITHOUT WRITTEN PERMISSION OF ANADOLU ISUZU OTOMOTIV SANAYI VE TIC. AS.

SAYFA NO / SHEET NO: 32

CITIPORT E6 C
GREASING TIMER & OIL REFILL

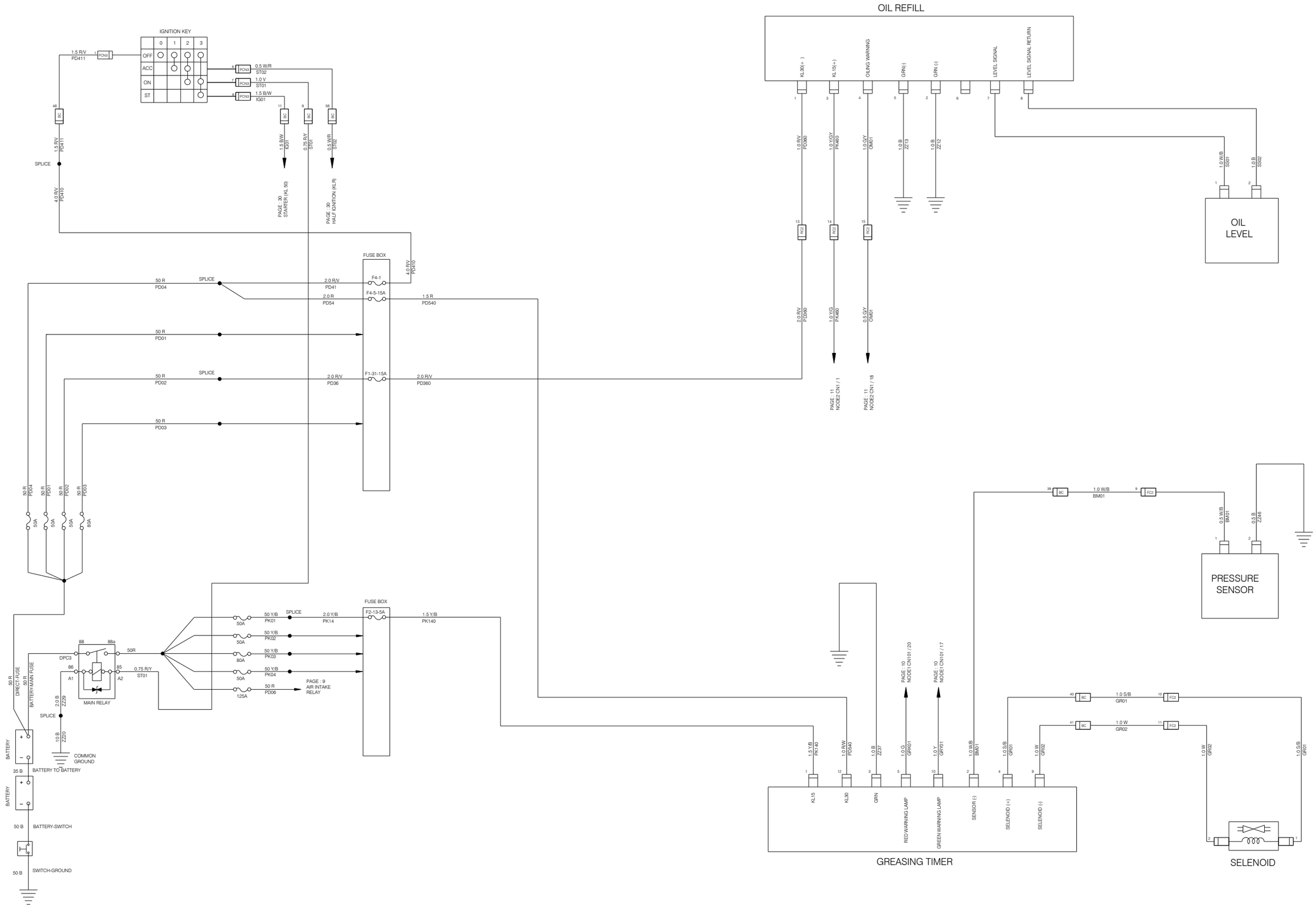

BU BELGE ANADOLU ISUZU OTOMOTIV SANAYI VE TIC. AS. NIN YAZILI IZNI OLMADAN HICBIR SEKILDE KOPYALANAMAZ.THIS DOCUMENT CAN NOT BE REPRODUCED WITHOUT WRITTEN PERMISSION OF ANADOLU ISUZU OTOMOTIV SANAYI VE TIC. AS.

CITIPORT E6 C
FIRE WARNING SYSTEM

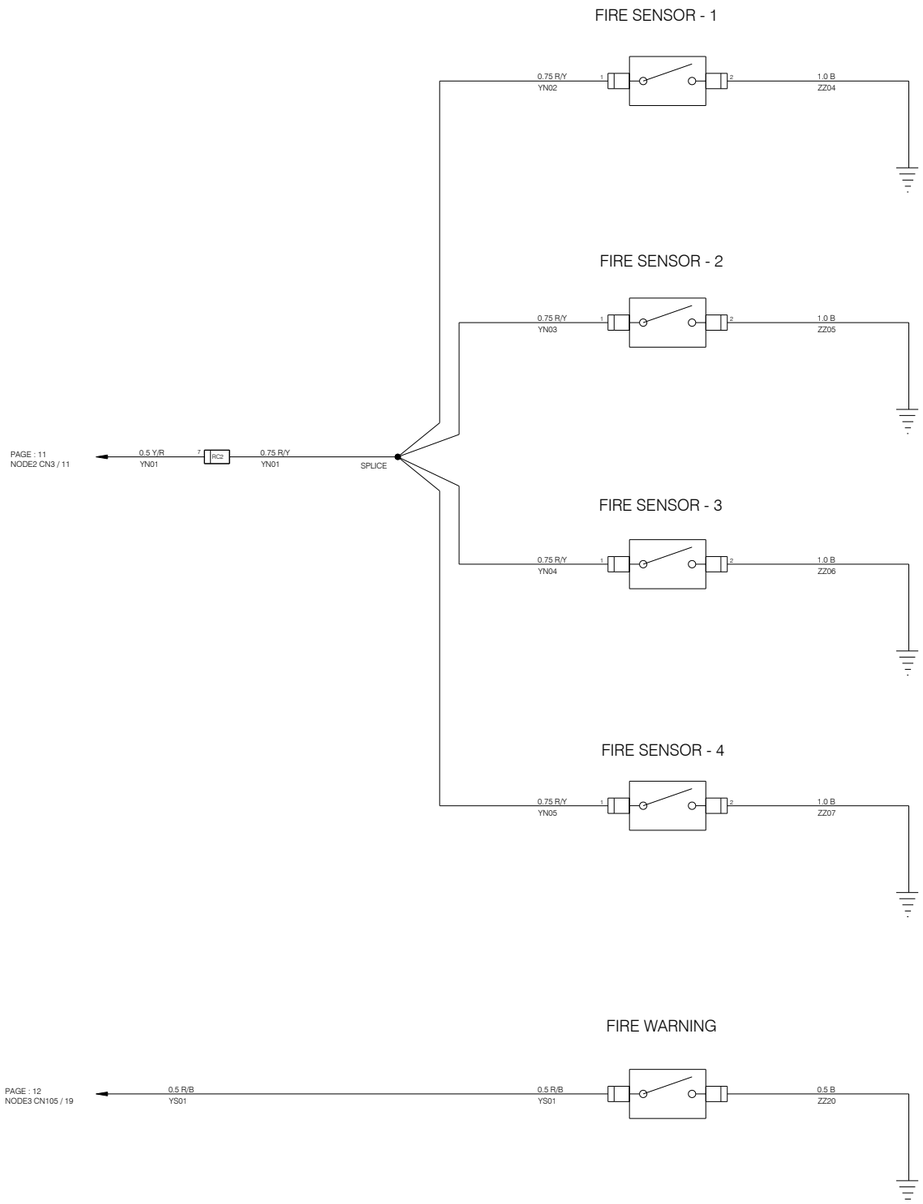

BU BELGE ANADOLU ISUZU OTOMOTIV SANAYI VE TIC. AS. NIN YAZILI IZNI OLMADAN HICBIR SEKILDE KOPYALANAMAZ.THIS DOCUMENT CAN NOT BE REPRODUCED WITHOUT WRITTEN PERMISSION OF ANADOLU ISUZU OTOMOTIV SANAYI VE TIC. AS.

CITIPORT E6 C
ECAS SYSTEM

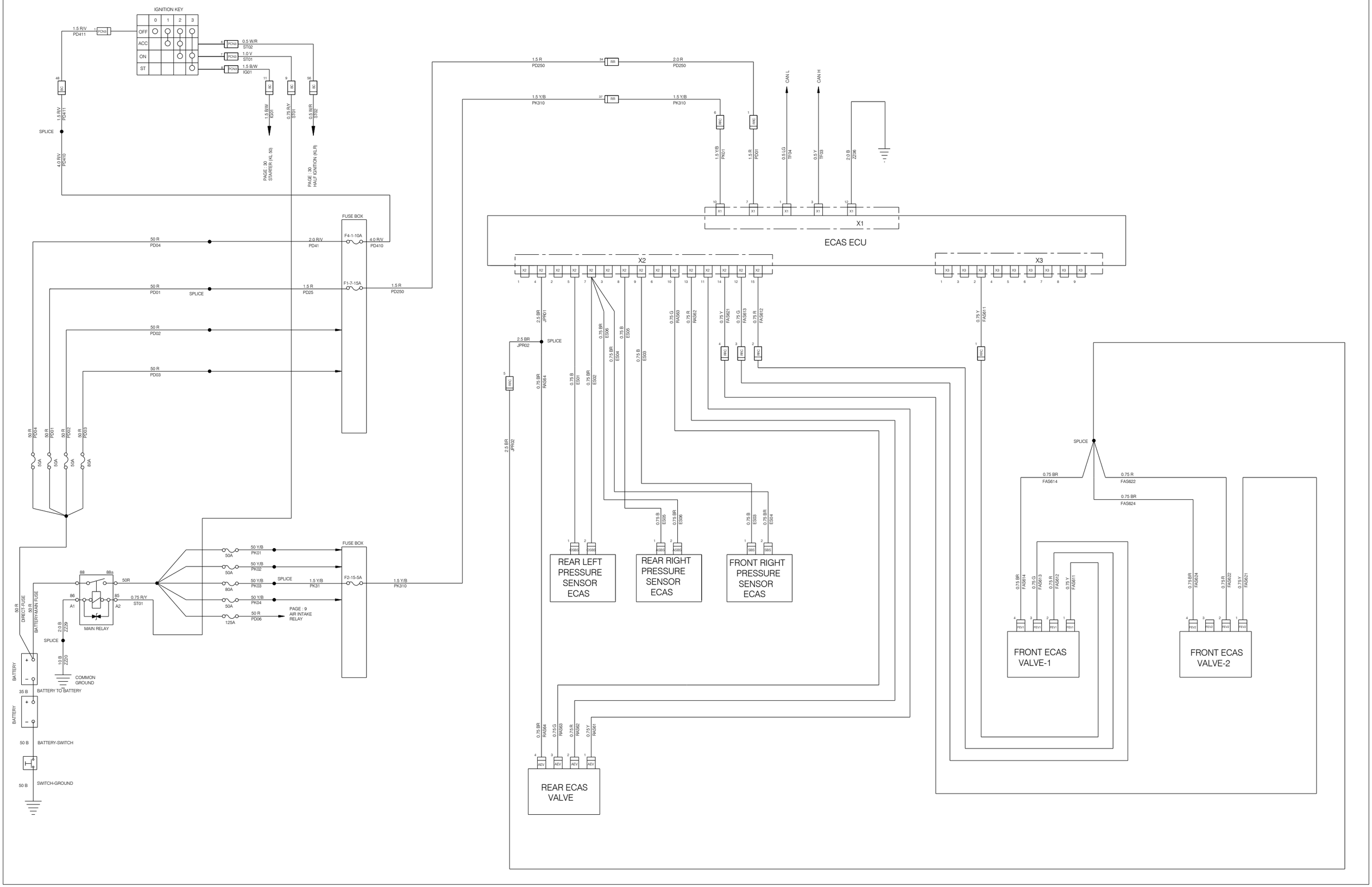

BU BELGE ANADOLU ISUZU OTOMOTIV SANAYI VE TIC. AS. NIN YAZILI IZNI OLMADAN HICBIR SEKILDE KOPYALANAMAZ.THIS DOCUMENT CAN NOT BE REPRODUCED WITHOUT WRITTEN PERMISSION OF ANADOLU ISUZU OTOMOTIV SANAYI VE TIC. AS.

CITIPORT E6 C
ELECTRONIC BRAKING SYSTEM

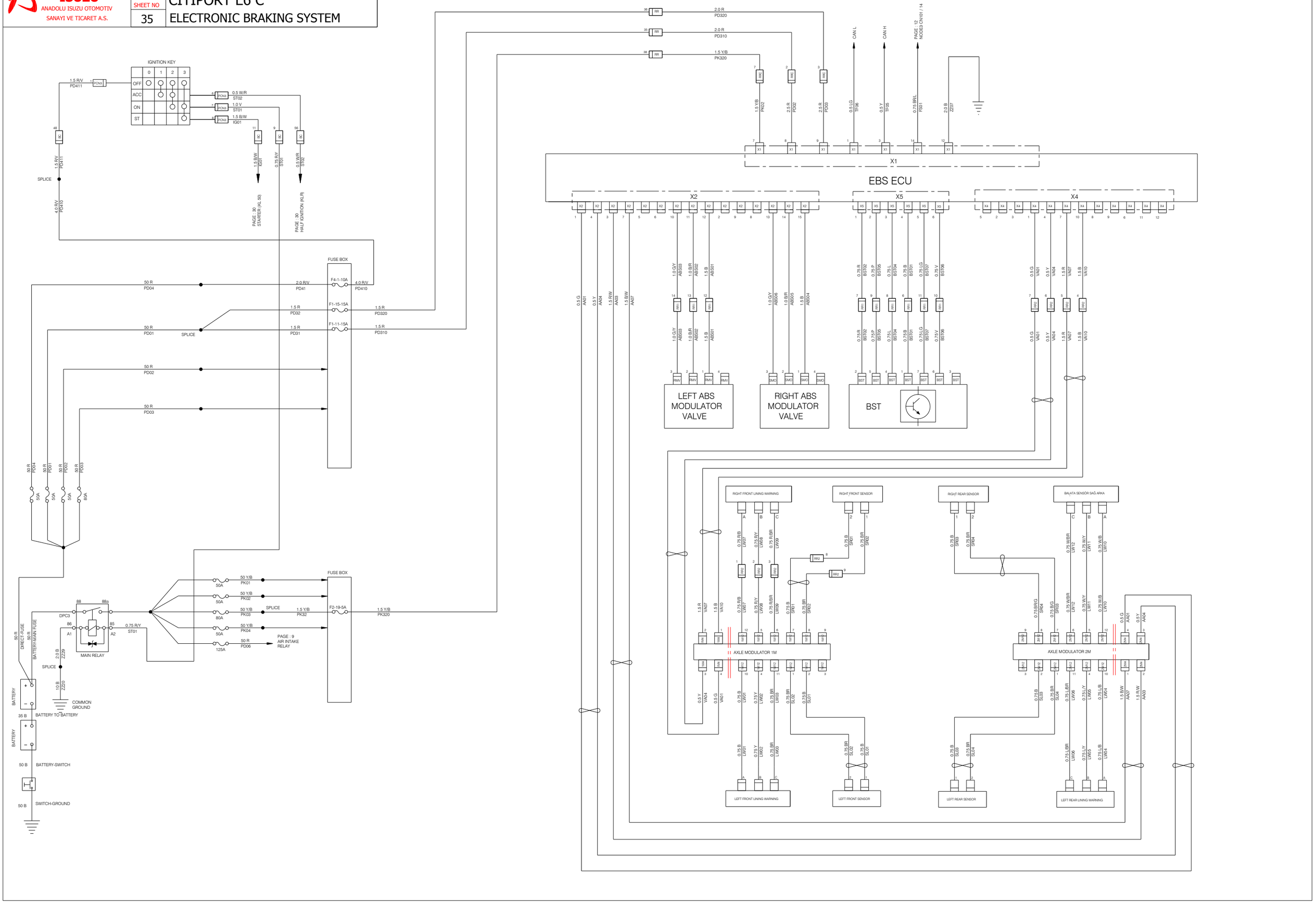

BU BELGE ANADOLU ISUZU OTOMOTIV SANAYI VE TIC. AS. NIN YAZILI IZNI OLMADAN HICBIR SEKILDE KOPYALANAMAZ.THIS DOCUMENT CAN NOT BE REPRODUCED WITHOUT WRITTEN PERMISSION OF ANADOLU ISUZU OTOMOTIV SANAYI VE TIC. AS.

CITIPORT E6 C

INTERIOR LIGHTING, ANNOUNCE SYSTEM, STOP WARNING

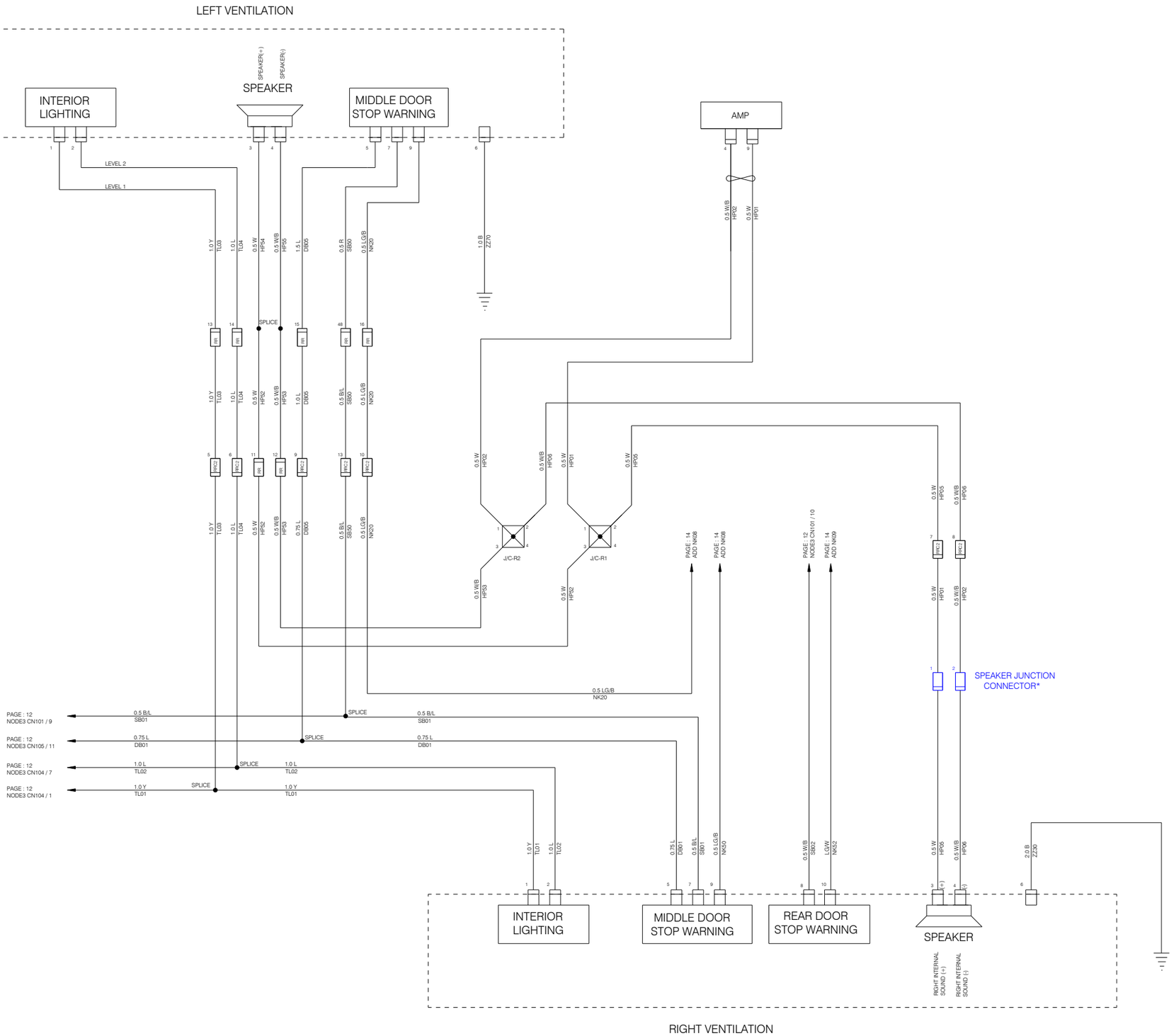

*IF VEHICLE HAS A RADIO, THAT CONNECTION WILL NOT DO.

BU BELGE ANADOLU ISUZU OTOMOTIV SANAYI VE TIC. AS. NIN YAZILI IZNI OLMADAN HICBIR SEKILDE KOPYALANAMAZ.THIS DOCUMENT CAN NOT BE REPRODUCED WITHOUT WRITTEN PERMISSION OF ANADOLU ISUZU OTOMOTIV SANAYI VE TIC. AS.
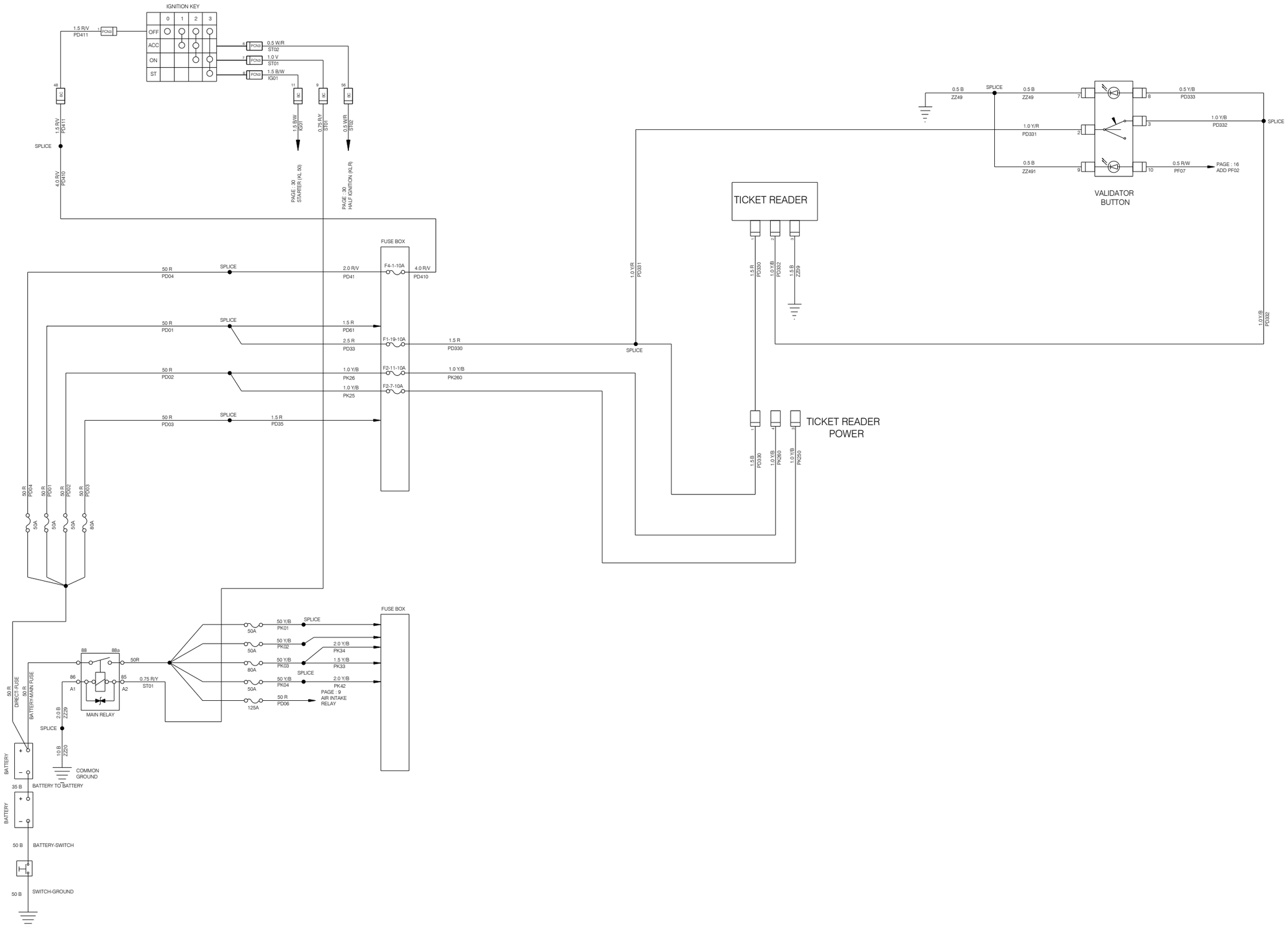
CITIPORT E6 C
VALIDATOR SYSTEM